WAVE PWB (PWC-4193) (9/15)

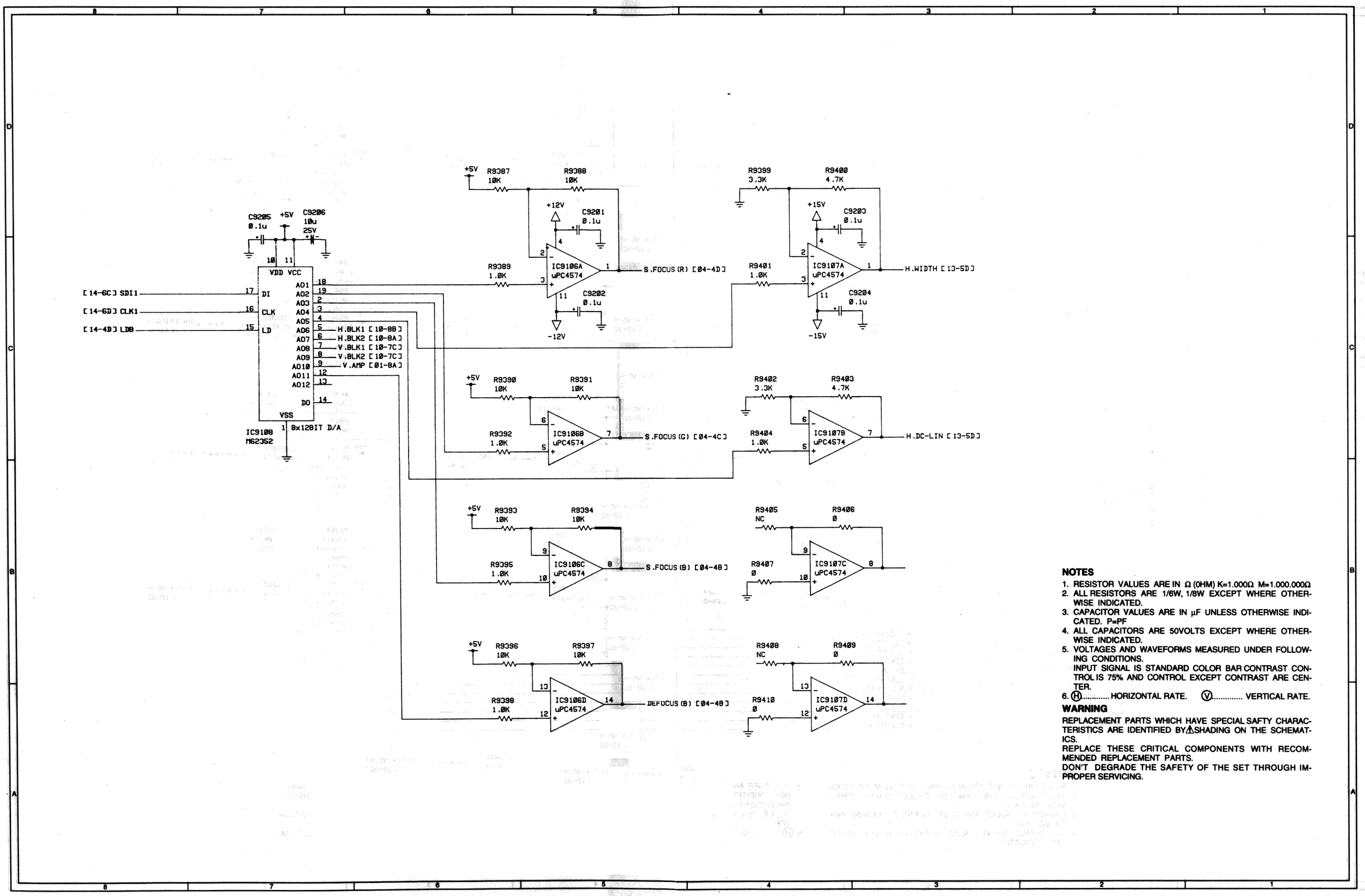

NOTES

1. RESISTOR VALUES ARE IN Ω (OHM) K=1.000Ω M=1.000.000Ω
2. ALL RESISTORS ARE 1/6W, 1/8W EXCEPT WHERE OTHERWISE INDICATED.
3. CAPACITOR VALUES ARE IN μF UNLESS OTHERWISE INDICATED. P=PF
4. ALL CAPACITORS ARE 50VOLTS EXCEPT WHERE OTHERWISE INDICATED.
5. VOLTAGES AND WAVEFORMS MEASURED UNDER FOLLOWING CONDITIONS.
   INPUT SIGNAL IS STANDARD COLOR BAR CONTRAST CONTROL IS 75% AND CONTROL EXCEPT CONTRAST ARE CENTER.
6. Ⓗ..... HORIZONTAL RATE. Ⓥ..... VERTICAL RATE.

WARNING

REPLACEMENT PARTS WHICH HAVE SPECIAL SAFTY CHARACTERISTICS ARE IDENTIFIED BY⚠SHADING ON THE SCHEMATICS.
REPLACE THESE CRITICAL COMPONENTS WITH RECOMMENDED REPLACEMENT PARTS.
DON'T DEGRADE THE SAFETY OF THE SET THROUGH IMPROPER SERVICING.

WAVE PWB (PWC-4193) (10/15)

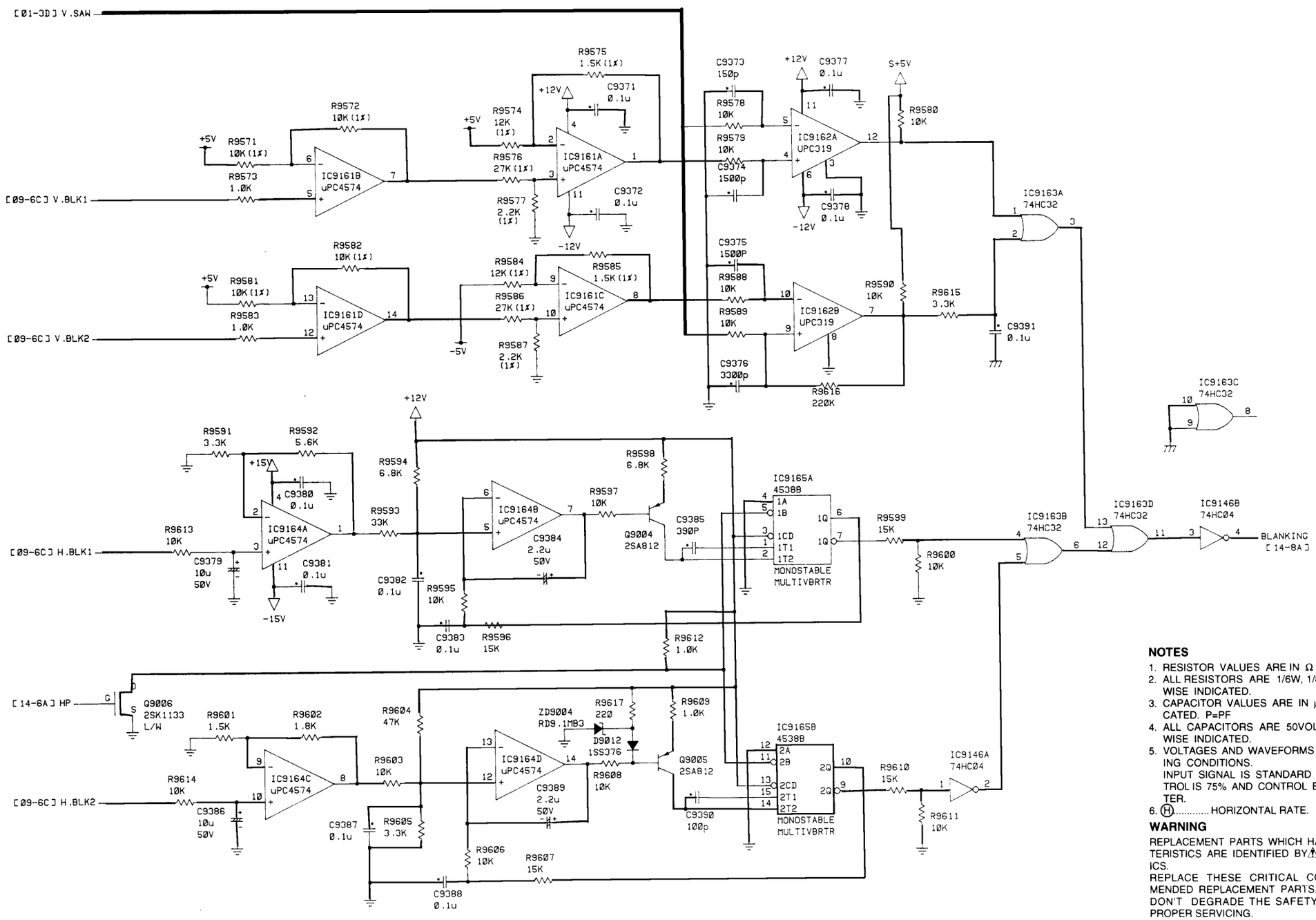

NOTES

1. RESISTOR VALUES ARE IN Ω (OHM) K=1.000Ω M=1.000.000Ω
2. ALL RESISTORS ARE 1/6W, 1/8W EXCEPT WHERE OTHERWISE INDICATED.
3. CAPACITOR VALUES ARE IN μF UNLESS OTHERWISE INDICATED. P=PF
4. ALL CAPACITORS ARE 50VOLTS EXCEPT WHERE OTHERWISE INDICATED.
5. VOLTAGES AND WAVEFORMS MEASURED UNDER FOLLOWING CONDITIONS.
   INPUT SIGNAL IS STANDARD COLOR BAR CONTRAST CONTROL IS 75% AND CONTROL EXCEPT CONTRAST ARE CENTER.
6. Ⓗ..... HORIZONTAL RATE. Ⓥ..... VERTICAL RATE.

WARNING

REPLACEMENT PARTS WHICH HAVE SPECIAL SAFTY CHARACTERISTICS ARE IDENTIFIED BY ⚠ SHADING ON THE SCHEMATICS.
REPLACE THESE CRITICAL COMPONENTS WITH RECOMMENDED REPLACEMENT PARTS.
DON'T DEGRADE THE SAFETY OF THE SET THROUGH IMPROPER SERVICING.

WAVE PWB (PWC-4193) (11/15)

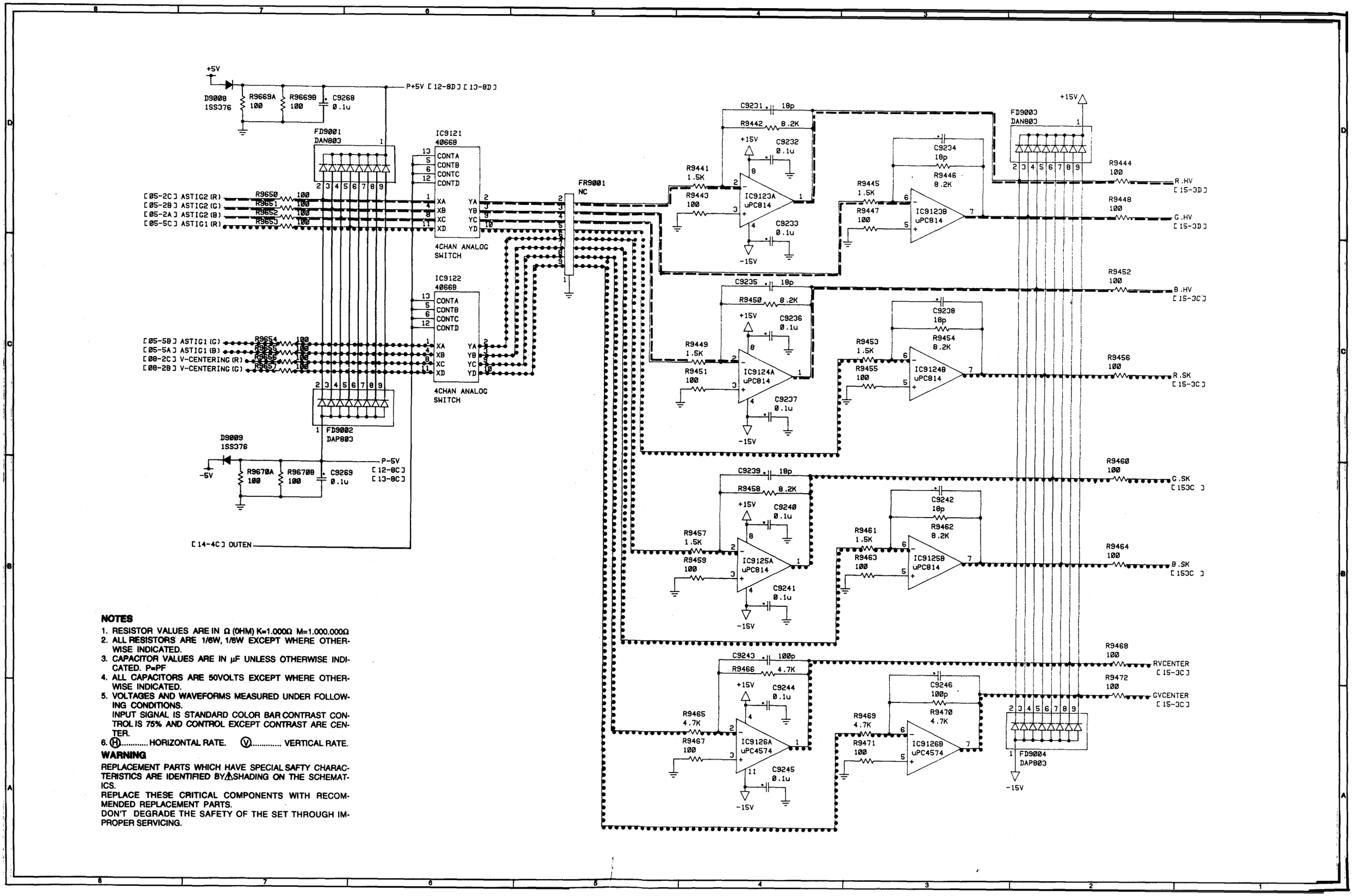

NOTES

1. RESISTOR VALUES ARE IN Ω (OHM) K=1.000Ω M=1.000.000Ω
2. ALL RESISTORS ARE 1/6W, 1/8W EXCEPT WHERE OTHERWISE INDICATED.
3. CAPACITOR VALUES ARE IN μF UNLESS OTHERWISE INDICATED. P=PF
4. ALL CAPACITORS ARE 50VOLTS EXCEPT WHERE OTHERWISE INDICATED.
5. VOLTAGES AND WAVEFORMS MEASURED UNDER FOLLOWING CONDITIONS.
   INPUT SIGNAL IS STANDARD COLOR BAR CONTRAST CONTROL IS 75% AND CONTROL EXCEPT CONTRAST ARE CENTER.
6. Ⓗ..... HORIZONTAL RATE. Ⓥ..... VERTICAL RATE.

WARNING

REPLACEMENT PARTS WHICH HAVE SPECIAL SAFTY CHARACTERISTICS ARE IDENTIFIED BY⚠SHADING ON THE SCHEMATICS.
REPLACE THESE CRITICAL COMPONENTS WITH RECOMMENDED REPLACEMENT PARTS.
DON'T DEGRADE THE SAFETY OF THE SET THROUGH IMPROPER SERVICING.

WAVE PWB (PWC-4193) (12/15)

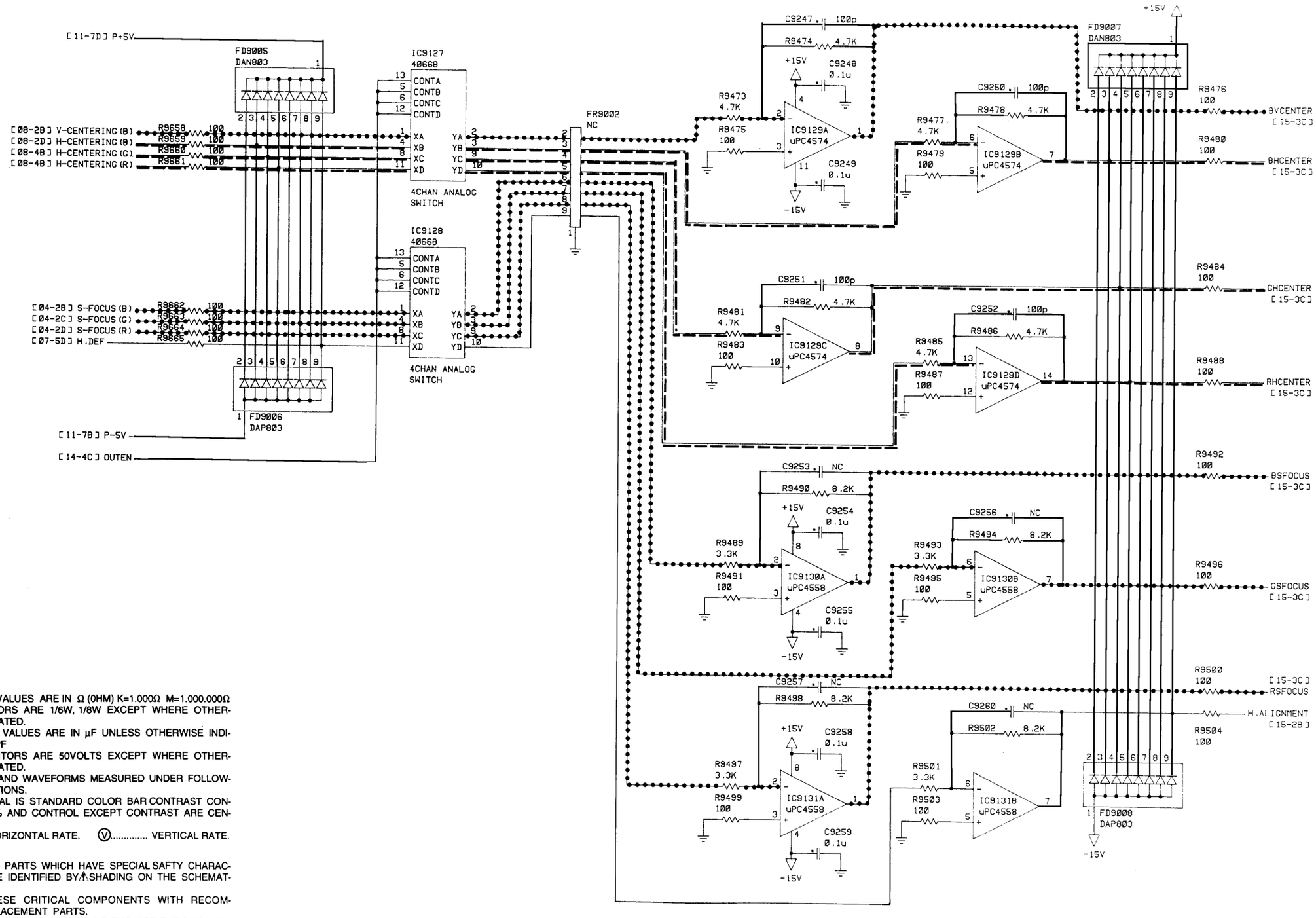

NOTES

1. RESISTOR VALUES ARE IN Ω (OHM) K=1.000Ω M=1.000.000Ω
2. ALL RESISTORS ARE 1/6W, 1/8W EXCEPT WHERE OTHERWISE INDICATED.
3. CAPACITOR VALUES ARE IN μF UNLESS OTHERWISE INDICATED. P=PF
4. ALL CAPACITORS ARE 50VOLTS EXCEPT WHERE OTHERWISE INDICATED.
5. VOLTAGES AND WAVEFORMS MEASURED UNDER FOLLOWING CONDITIONS.
   INPUT SIGNAL IS STANDARD COLOR BAR CONTRAST CONTROL IS 75% AND CONTROL EXCEPT CONTRAST ARE CENTER.
6. Ⓗ..... HORIZONTAL RATE. Ⓥ..... VERTICAL RATE.

WARNING

REPLACEMENT PARTS WHICH HAVE SPECIAL SAFTY CHARACTERISTICS ARE IDENTIFIED BY ⚠ SHADING ON THE SCHEMATICS.
REPLACE THESE CRITICAL COMPONENTS WITH RECOMMENDED REPLACEMENT PARTS.
DON'T DEGRADE THE SAFETY OF THE SET THROUGH IMPROPER SERVICING.

WAVE PWB (PWC-4193) (13/15)

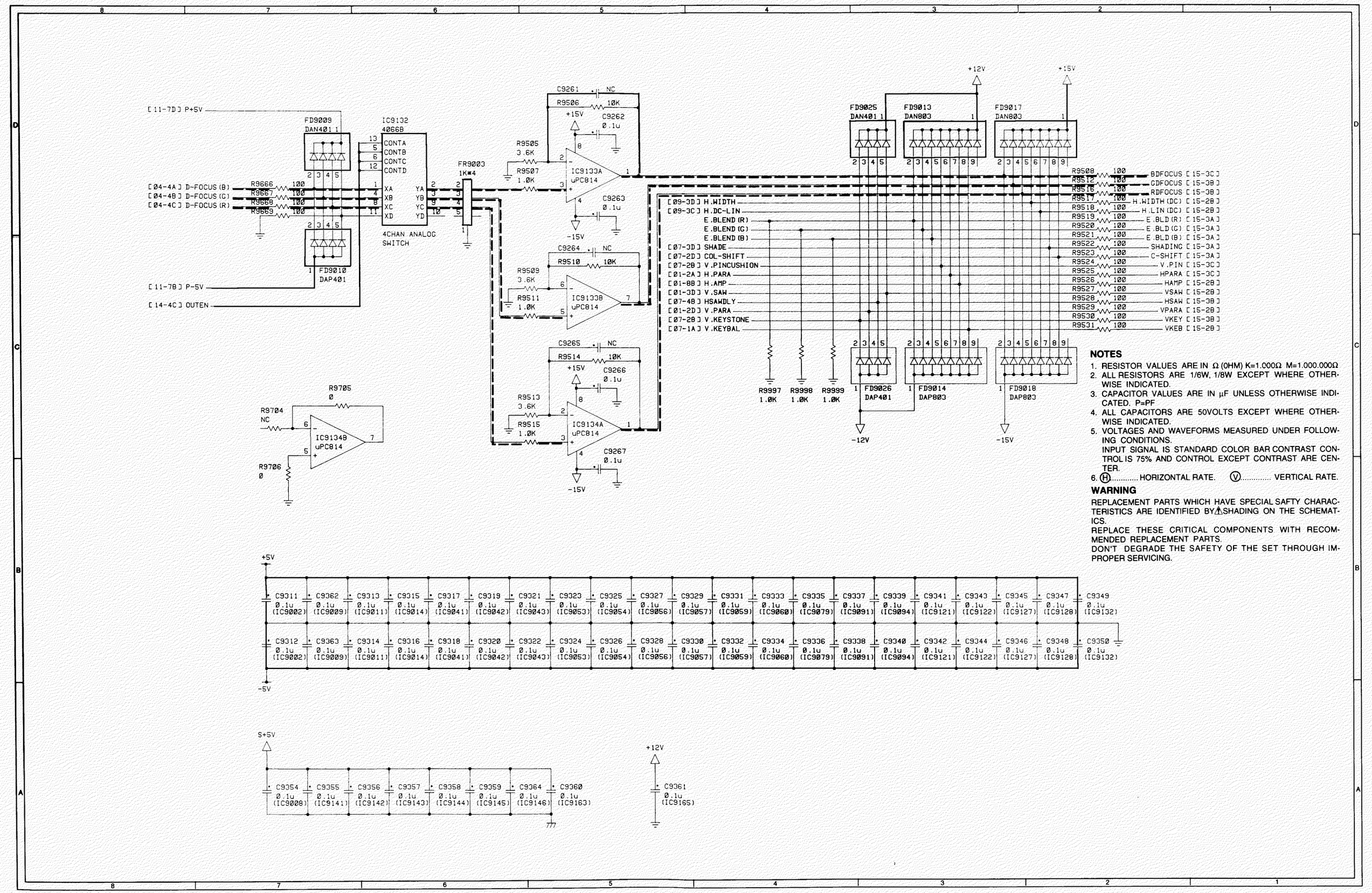

NOTES

1. RESISTOR VALUES ARE IN Ω (OHM) K=1.000Ω M=1.000.000Ω
2. ALL RESISTORS ARE 1/6W, 1/8W EXCEPT WHERE OTHERWISE INDICATED.
3. CAPACITOR VALUES ARE IN μF UNLESS OTHERWISE INDICATED. P=PF
4. ALL CAPACITORS ARE 50VOLTS EXCEPT WHERE OTHERWISE INDICATED.
5. VOLTAGES AND WAVEFORMS MEASURED UNDER FOLLOWING CONDITIONS.
   INPUT SIGNAL IS STANDARD COLOR BAR CONTRAST CONTROL IS 75% AND CONTROL EXCEPT CONTRAST ARE CENTER.
6. Ⓗ..... HORIZONTAL RATE. Ⓥ..... VERTICAL RATE.

WARNING

REPLACEMENT PARTS WHICH HAVE SPECIAL SAFTY CHARACTERISTICS ARE IDENTIFIED BY ⚠ SHADING ON THE SCHEMATICS.
REPLACE THESE CRITICAL COMPONENTS WITH RECOMMENDED REPLACEMENT PARTS.
DON'T DEGRADE THE SAFETY OF THE SET THROUGH IMPROPER SERVICING.

WAVE PWB (PWC-4193) (14/15)

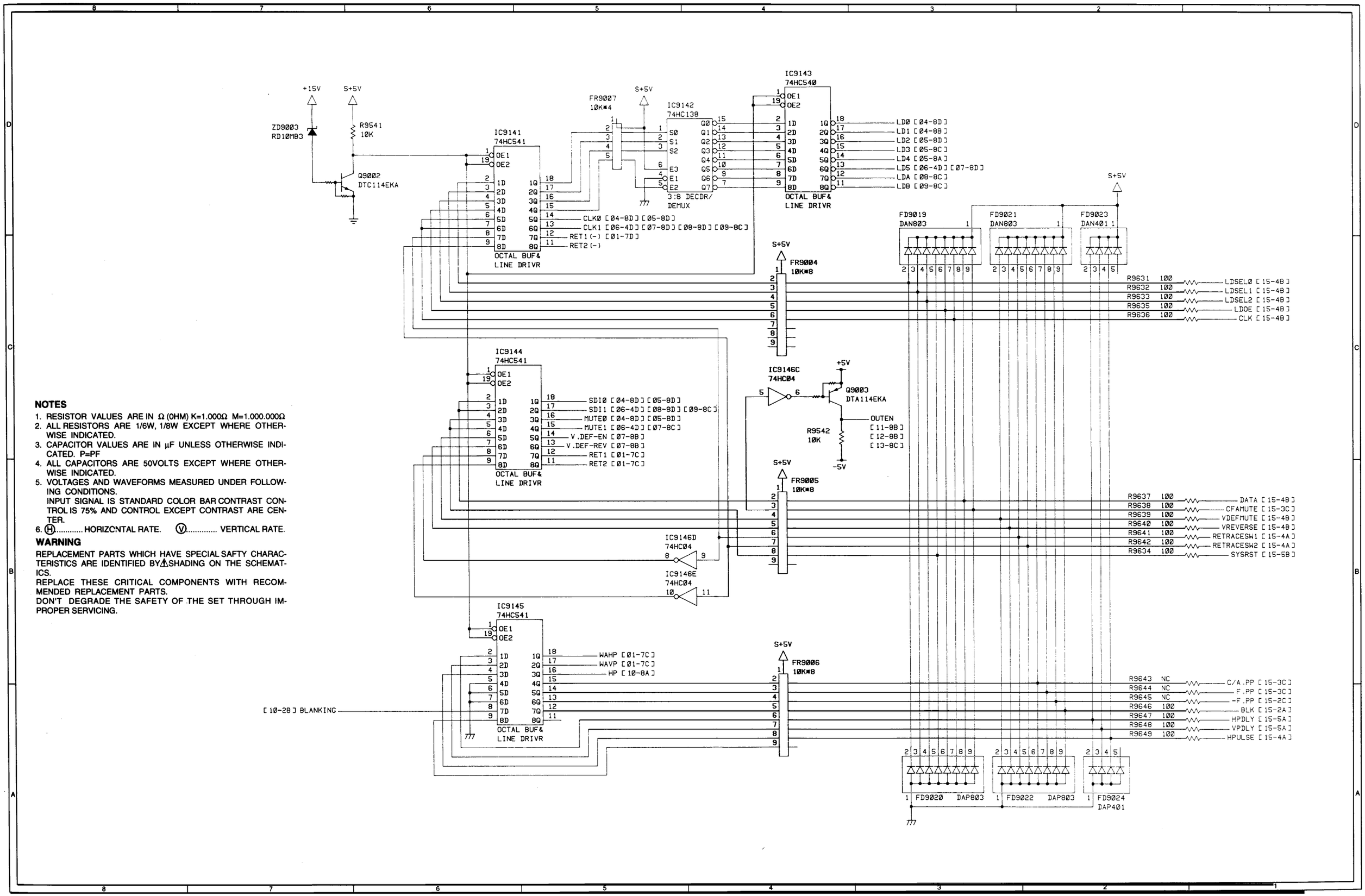

NOTES

1. RESISTOR VALUES ARE IN Ω (OHM) K=1.000Ω M=1.000.000Ω
2. ALL RESISTORS ARE 1/6W, 1/8W EXCEPT WHERE OTHERWISE INDICATED.
3. CAPACITOR VALUES ARE IN μF UNLESS OTHERWISE INDICATED. P=PF
4. ALL CAPACITORS ARE 50VOLTS EXCEPT WHERE OTHERWISE INDICATED.
5. VOLTAGES AND WAVEFORMS MEASURED UNDER FOLLOWING CONDITIONS.
   INPUT SIGNAL IS STANDARD COLOR BAR CONTRAST CONTROL IS 75% AND CONTROL EXCEPT CONTRAST ARE CENTER.
6. Ⓗ..... HORIZONTAL RATE. Ⓥ..... VERTICAL RATE.

WARNING

REPLACEMENT PARTS WHICH HAVE SPECIAL SAFTY CHARACTERISTICS ARE IDENTIFIED BY ⚠ SHADING ON THE SCHEMATICS.
REPLACE THESE CRITICAL COMPONENTS WITH RECOMMENDED REPLACEMENT PARTS.
DON'T DEGRADE THE SAFETY OF THE SET THROUGH IMPROPER SERVICING.

WAVE PWB (PWC-4193) (15/15)

NOTES

1. RESISTOR VALUES ARE IN Ω (OHM) K=1.000Ω M=1.000.000Ω
2. ALL RESISTORS ARE 1/10W EXCEPT WHERE OTHERWISE INDICATED.
3. CAPACITOR VALUES ARE IN μF UNLESS OTHERWISE INDICATED. P=PF
4. ALL CAPACITORS ARE 50VOLTS EXCEPT WHERE OTHERWISE INDICATED.
5. VOLTAGES AND WAVEFORMS MEASURED UNDER FOLLOWING CONDITIONS.
   INPUT SIGNAL IS STANDARD COLOR BAR CONTRAST CONTROL IS 75% AND CONTROL EXCEPT CONTRAST ARE CENTER.
6. Ⓗ..... HORIZONTAL RATE. Ⓥ..... VERTICAL RATE.

WARNING

REPLACEMENT PARTS WHICH HAVE SPECIAL SAFTY CHARACTERISTICS ARE IDENTIFIED BY⚠SHADING ON THE SCHEMATICS.
REPLACE THESE CRITICAL COMPONENTS WITH RECOMMENDED REPLACEMENT PARTS.
DON'T DEGRADE THE SAFETY OF THE SET THROUGH IMPROPER SERVICING.

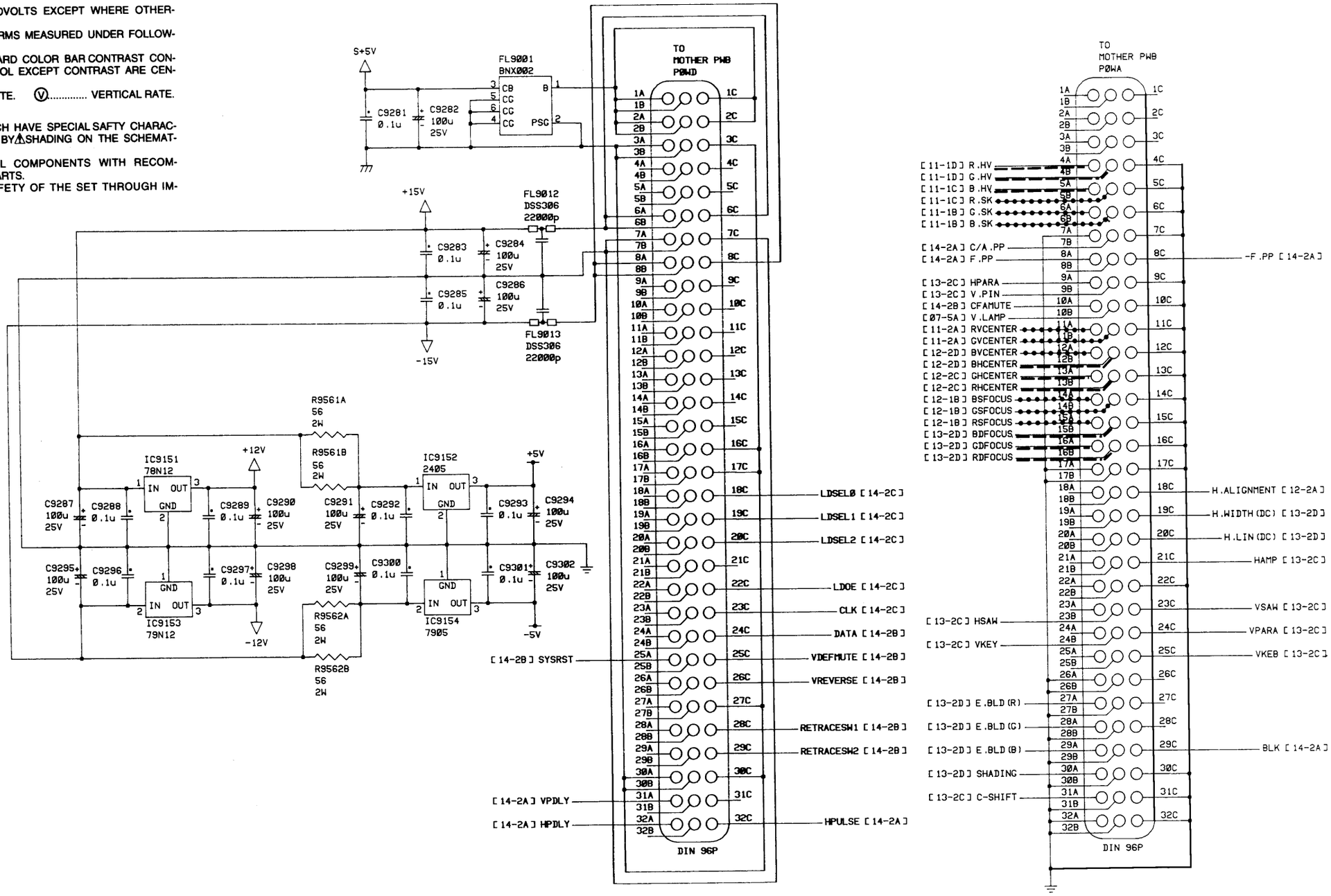

WAVE PWB PWC-4193) WAVE FORM

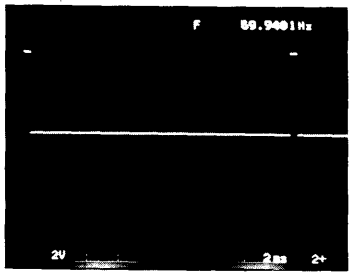

W1

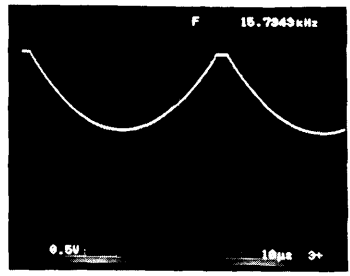

W6

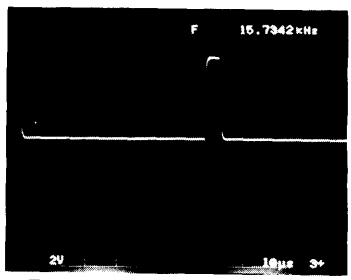

W2

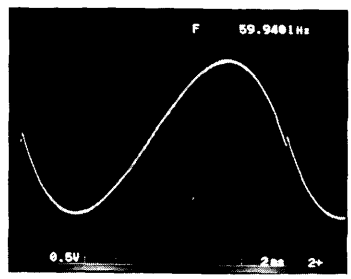

W7

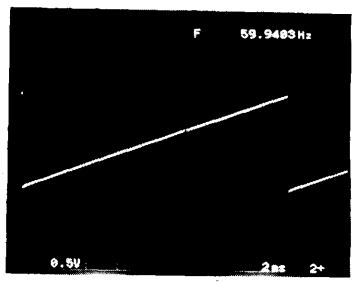

W3

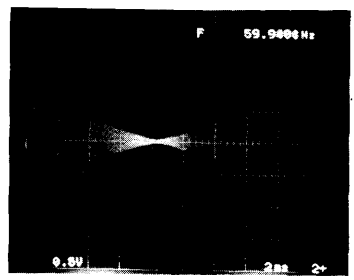

W8

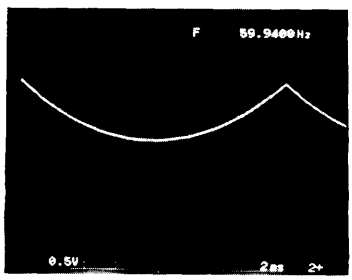

W4

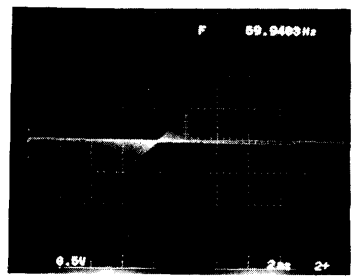

W9

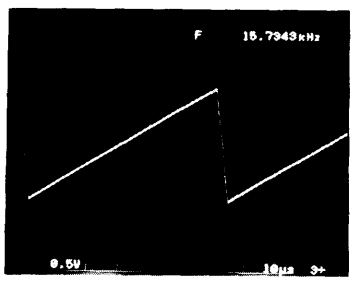

W5

WAVE PWB (PWC-4193)
PARTS SIDE

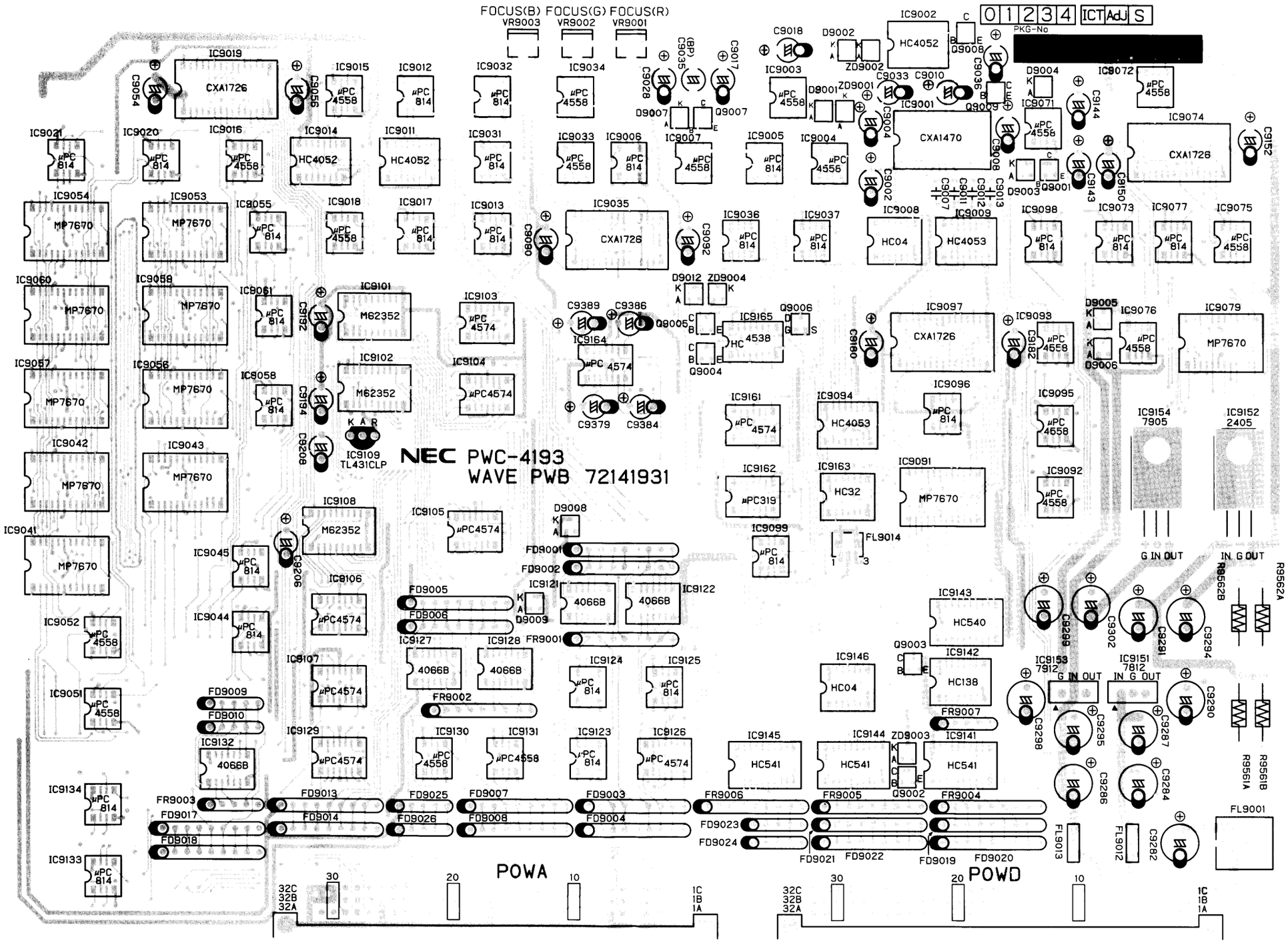

WAVE PWB (PWC-4193)
SOLDER SIDE

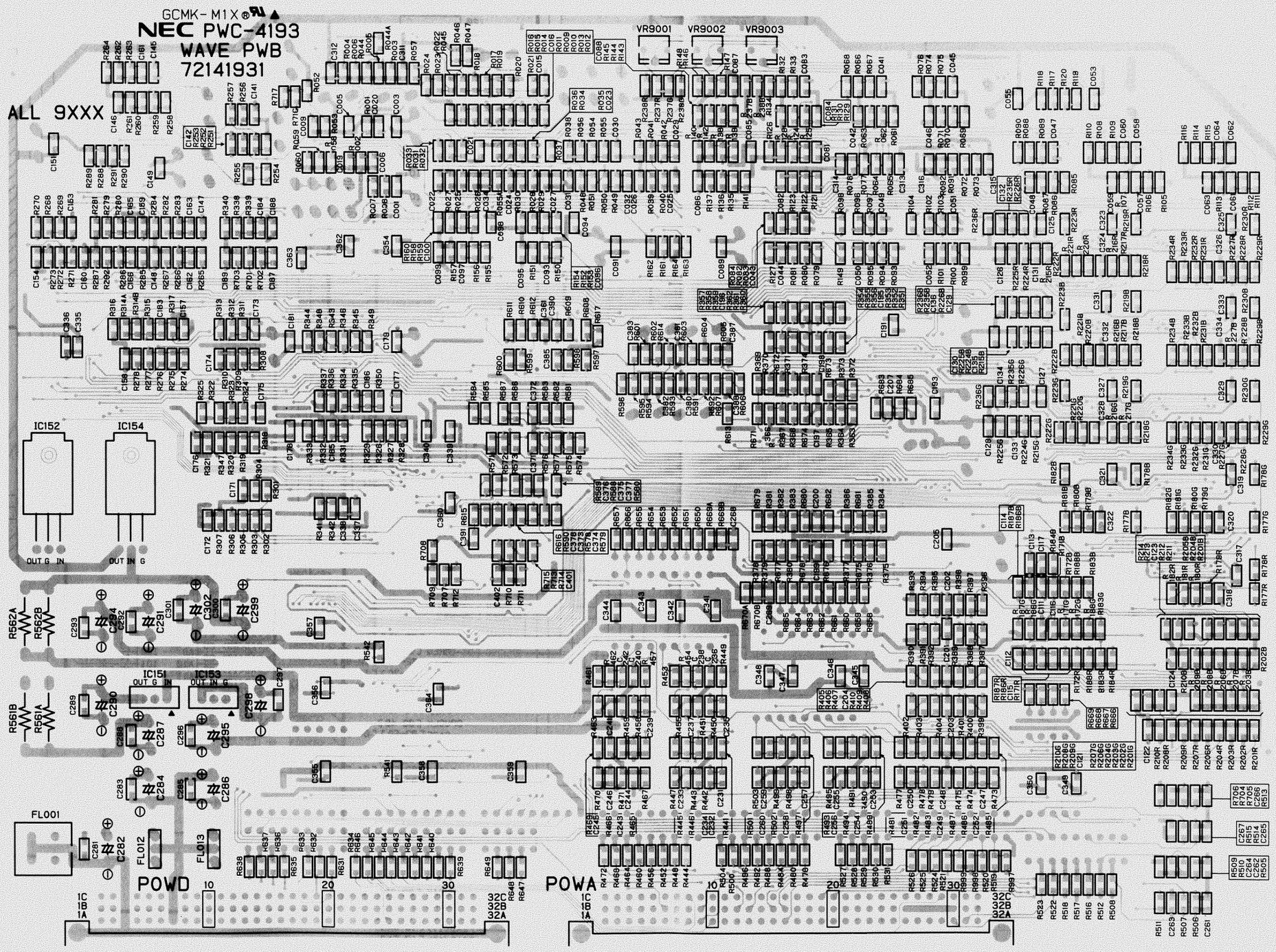

D-CONV PWB (PWC-4190) (1/12)

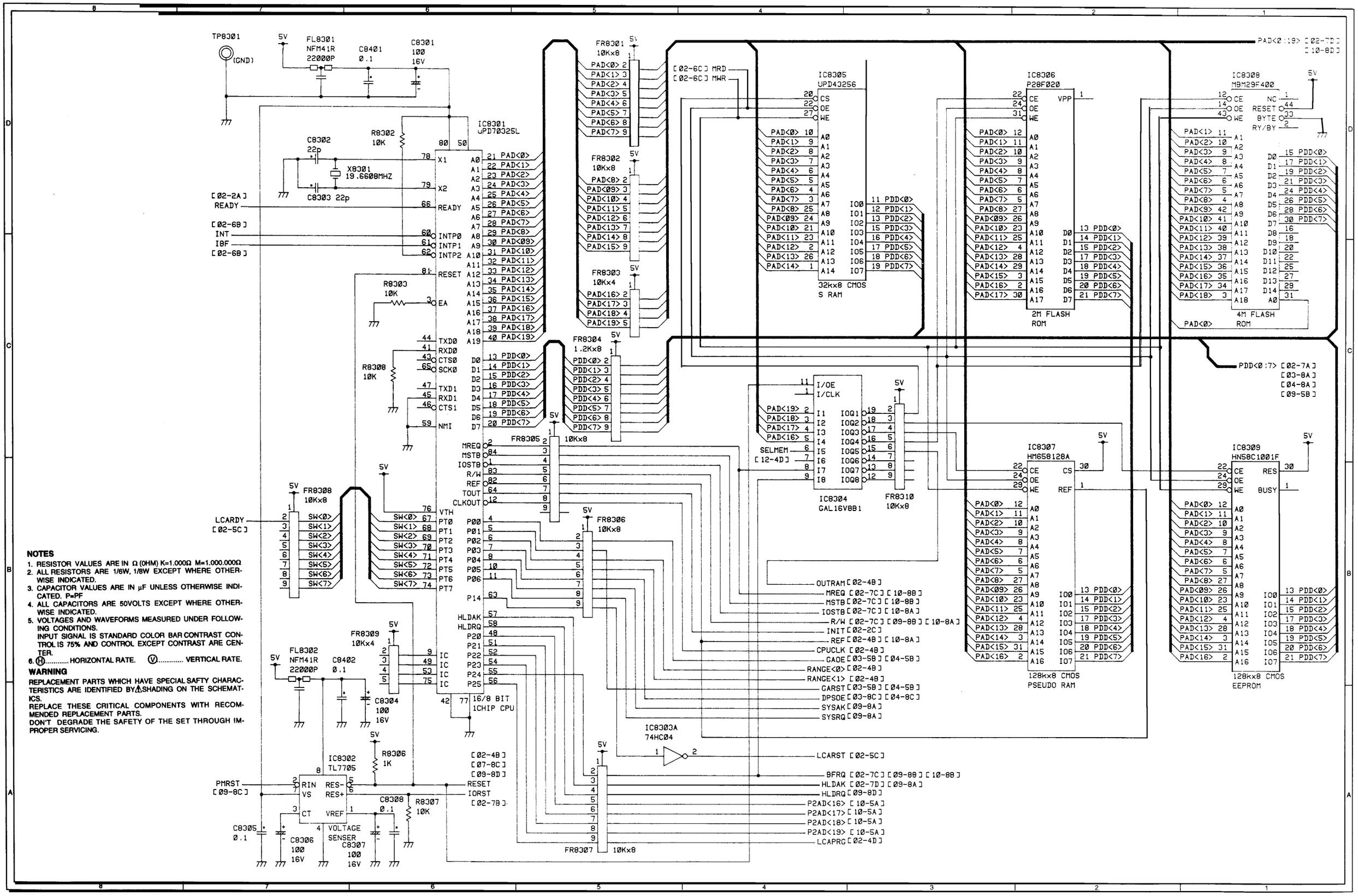

NOTES

1. RESISTOR VALUES ARE IN Ω (OHM) K=1.000Ω M=1.000.000Ω
2. ALL RESISTORS ARE 1/6W, 1/8W EXCEPT WHERE OTHERWISE INDICATED.
3. CAPACITOR VALUES ARE IN μF UNLESS OTHERWISE INDICATED. P=PF
4. ALL CAPACITORS ARE 50VOLTS EXCEPT WHERE OTHERWISE INDICATED.
5. VOLTAGES AND WAVEFORMS MEASURED UNDER FOLLOWING CONDITIONS.
   INPUT SIGNAL IS STANDARD COLOR BAR CONTRAST CONTROL IS 75% AND CONTROL EXCEPT CONTRAST ARE CENTER.
6. Ⓗ..... HORIZONTAL RATE. Ⓥ..... VERTICAL RATE.

WARNING

REPLACEMENT PARTS WHICH HAVE SPECIAL SAFTY CHARACTERISTICS ARE IDENTIFIED BY ⚠ SHADING ON THE SCHEMATICS.
REPLACE THESE CRITICAL COMPONENTS WITH RECOMMENDED REPLACEMENT PARTS.
DON'T DEGRADE THE SAFETY OF THE SET THROUGH IMPROPER SERVICING.

D-CONV PWB (PWC-4190) (2/12)

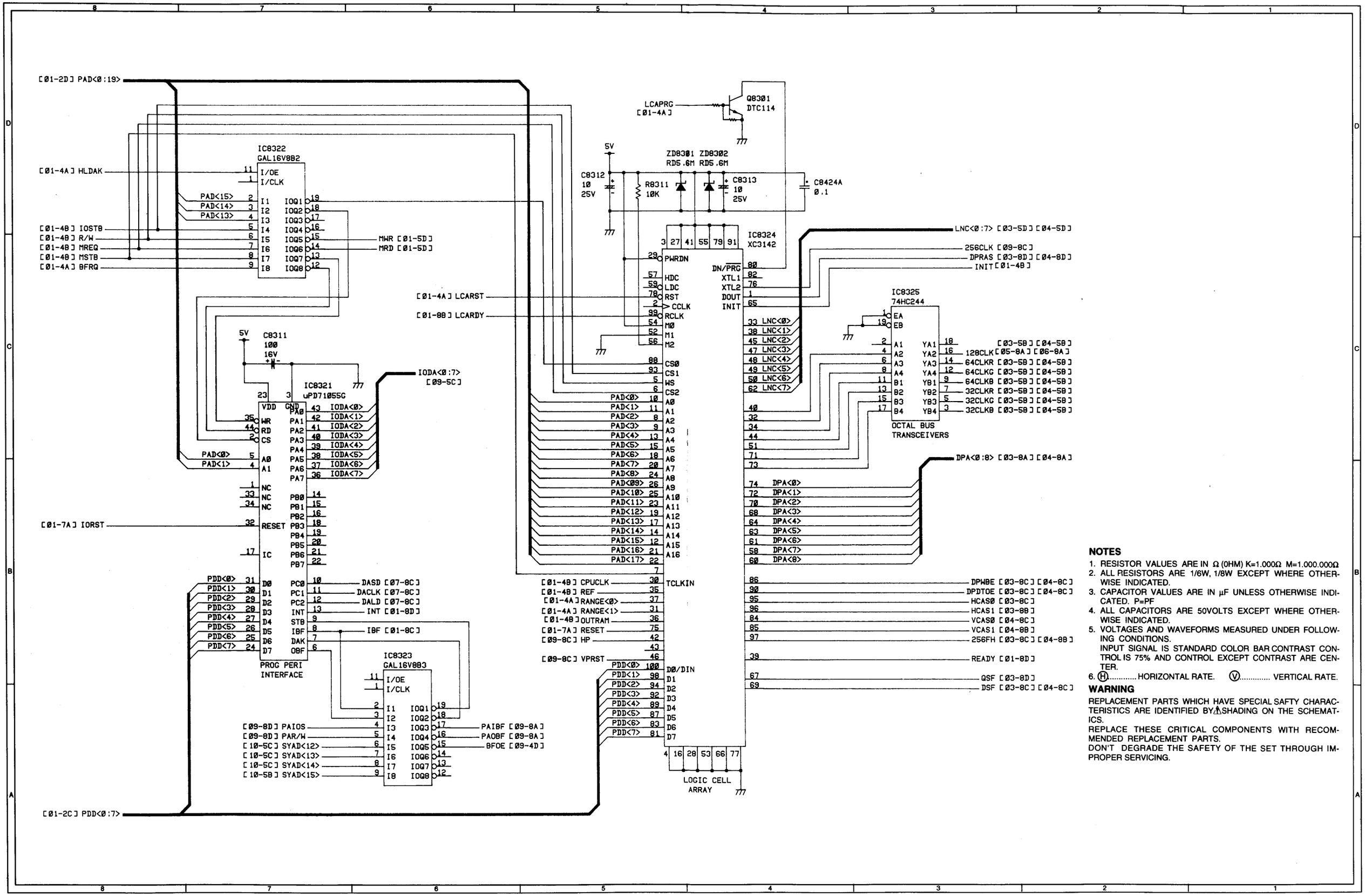

NOTES

1. RESISTOR VALUES ARE IN Ω (OHM) K=1.000Ω M=1.000.000Ω
2. ALL RESISTORS ARE 1/6W, 1/8W EXCEPT WHERE OTHERWISE INDICATED.
3. CAPACITOR VALUES ARE IN μF UNLESS OTHERWISE INDICATED. P=PF
4. ALL CAPACITORS ARE 50VOLTS EXCEPT WHERE OTHERWISE INDICATED.
5. VOLTAGES AND WAVEFORMS MEASURED UNDER FOLLOWING CONDITIONS.
   INPUT SIGNAL IS STANDARD COLOR BAR CONTRAST CONTROL IS 75% AND CONTROL EXCEPT CONTRAST ARE CENTER.
6. Ⓗ..... HORIZONTAL RATE. Ⓥ..... VERTICAL RATE.

WARNING

REPLACEMENT PARTS WHICH HAVE SPECIAL SAFTY CHARACTERISTICS ARE IDENTIFIED BY ⚠ SHADING ON THE SCHEMATICS.
REPLACE THESE CRITICAL COMPONENTS WITH RECOMMENDED REPLACEMENT PARTS.
DON'T DEGRADE THE SAFETY OF THE SET THROUGH IMPROPER SERVICING.

D-CONV PWB (PWC-4190) (3/12)

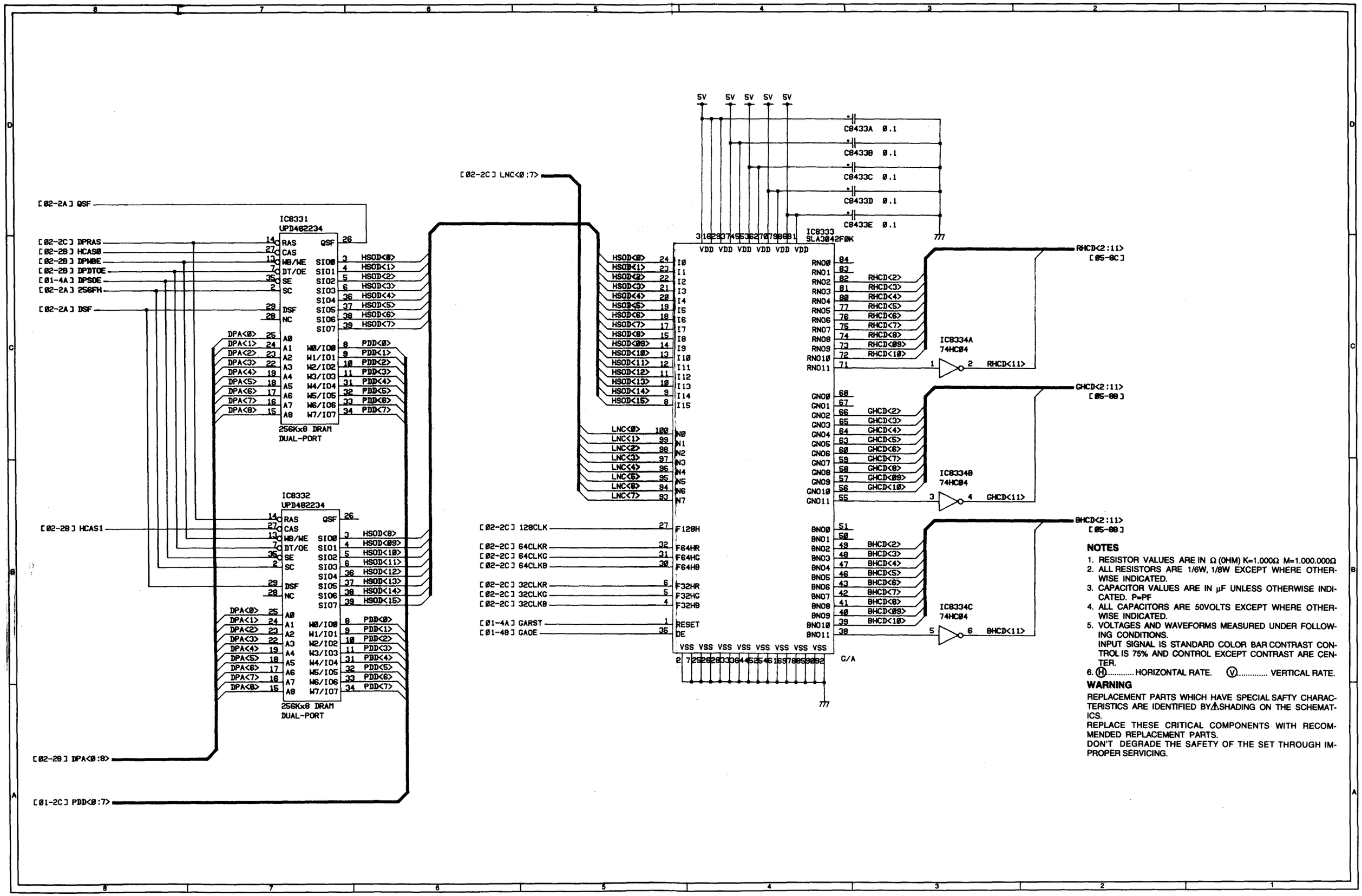

NOTES

1. RESISTOR VALUES ARE IN Ω (OHM) K=1.000Ω M=1.000.000Ω
2. ALL RESISTORS ARE 1/6W, 1/8W EXCEPT WHERE OTHERWISE INDICATED.
3. CAPACITOR VALUES ARE IN μF UNLESS OTHERWISE INDICATED. P=PF
4. ALL CAPACITORS ARE 50VOLTS EXCEPT WHERE OTHERWISE INDICATED.
5. VOLTAGES AND WAVEFORMS MEASURED UNDER FOLLOWING CONDITIONS.
   INPUT SIGNAL IS STANDARD COLOR BAR CONTRAST CONTROL IS 75% AND CONTROL EXCEPT CONTRAST ARE CENTER.
6. Ⓗ..... HORIZONTAL RATE. Ⓥ..... VERTICAL RATE.

WARNING

REPLACEMENT PARTS WHICH HAVE SPECIAL SAFTY CHARACTERISTICS ARE IDENTIFIED BY⚠SHADING ON THE SCHEMATICS.
REPLACE THESE CRITICAL COMPONENTS WITH RECOMMENDED REPLACEMENT PARTS.
DON'T DEGRADE THE SAFETY OF THE SET THROUGH IMPROPER SERVICING.

D-CONV PWB (PWC-4190) (4/12)

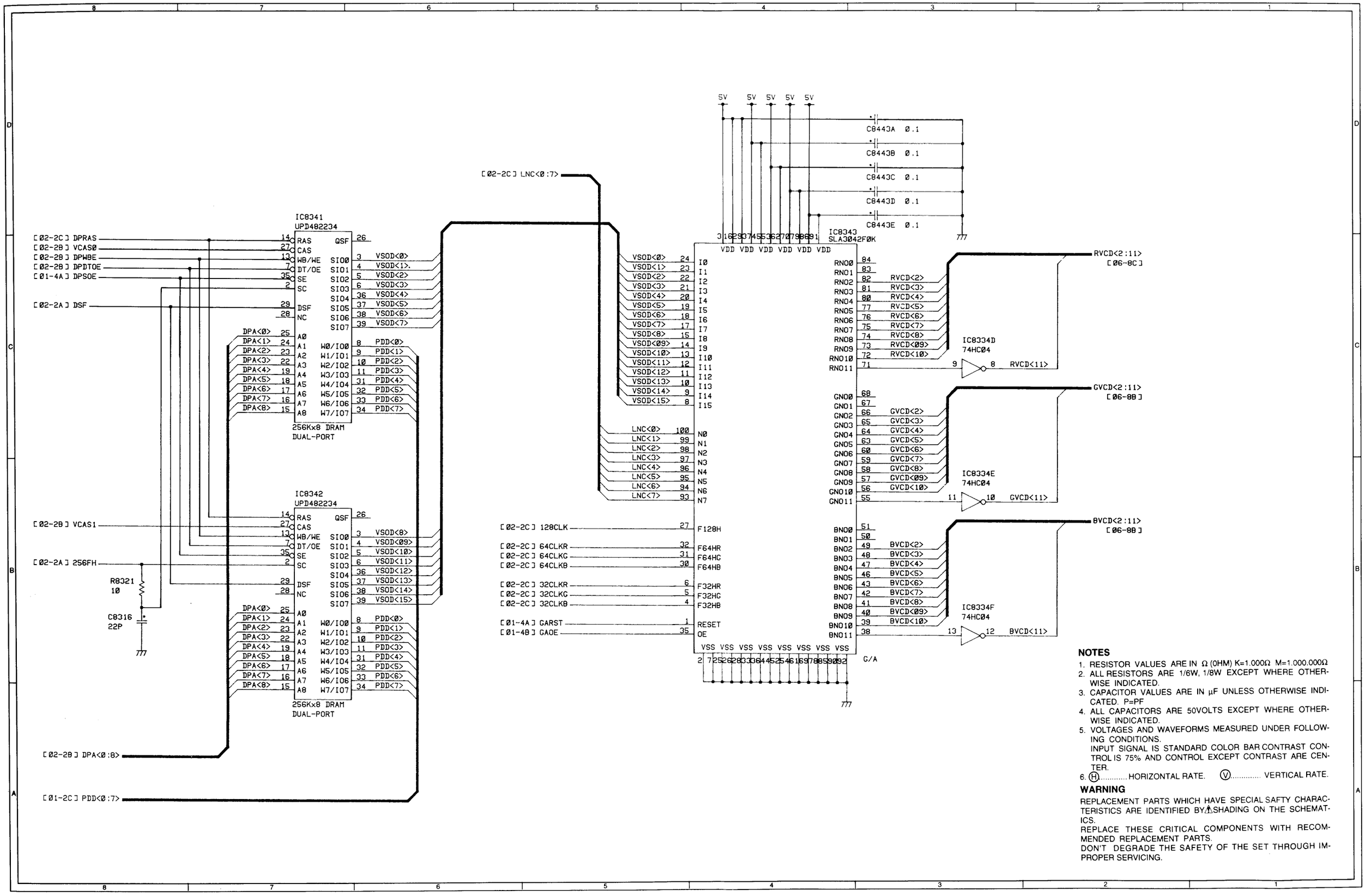

NOTES

1. RESISTOR VALUES ARE IN Ω (OHM) K=1.000Ω M=1.000.000Ω
2. ALL RESISTORS ARE 1/6W, 1/8W EXCEPT WHERE OTHERWISE INDICATED.
3. CAPACITOR VALUES ARE IN μF UNLESS OTHERWISE INDICATED. P=PF
4. ALL CAPACITORS ARE 50VOLTS EXCEPT WHERE OTHERWISE INDICATED.
5. VOLTAGES AND WAVEFORMS MEASURED UNDER FOLLOWING CONDITIONS.
   INPUT SIGNAL IS STANDARD COLOR BAR CONTRAST CONTROL IS 75% AND CONTROL EXCEPT CONTRAST ARE CENTER.
6. Ⓗ..... HORIZONTAL RATE. Ⓥ..... VERTICAL RATE.

WARNING

REPLACEMENT PARTS WHICH HAVE SPECIAL SAFTY CHARACTERISTICS ARE IDENTIFIED BY ⚠ SHADING ON THE SCHEMATICS.
REPLACE THESE CRITICAL COMPONENTS WITH RECOMMENDED REPLACEMENT PARTS.
DON'T DEGRADE THE SAFETY OF THE SET THROUGH IMPROPER SERVICING.

D-CONV PWB (PWC-4190) (5/12)

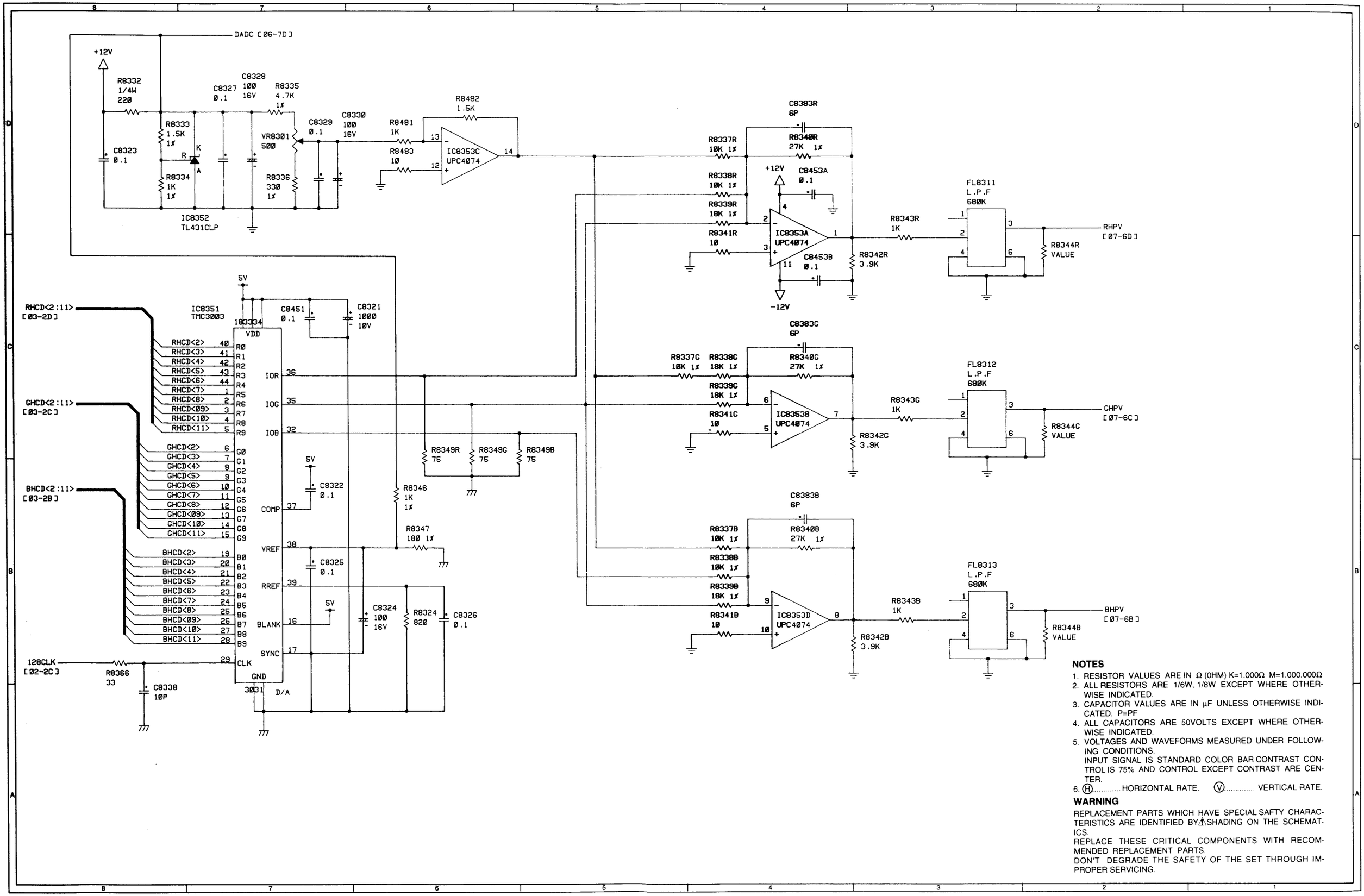

NOTES

1. RESISTOR VALUES ARE IN Ω (OHM) K=1.000Ω M=1.000.000Ω
2. ALL RESISTORS ARE 1/6W, 1/8W EXCEPT WHERE OTHERWISE INDICATED.
3. CAPACITOR VALUES ARE IN μF UNLESS OTHERWISE INDICATED. P=PF
4. ALL CAPACITORS ARE 50VOLTS EXCEPT WHERE OTHERWISE INDICATED.
5. VOLTAGES AND WAVEFORMS MEASURED UNDER FOLLOWING CONDITIONS.
   INPUT SIGNAL IS STANDARD COLOR BAR CONTRAST CONTROL IS 75% AND CONTROL EXCEPT CONTRAST ARE CENTER.
6. Ⓗ..... HORIZONTAL RATE. Ⓥ..... VERTICAL RATE.

WARNING

REPLACEMENT PARTS WHICH HAVE SPECIAL SAFTY CHARACTERISTICS ARE IDENTIFIED BY ⚠ SHADING ON THE SCHEMATICS.
REPLACE THESE CRITICAL COMPONENTS WITH RECOMMENDED REPLACEMENT PARTS.
DON'T DEGRADE THE SAFETY OF THE SET THROUGH IMPROPER SERVICING.

D-CONV PWB (PWC-4190) (6/12)

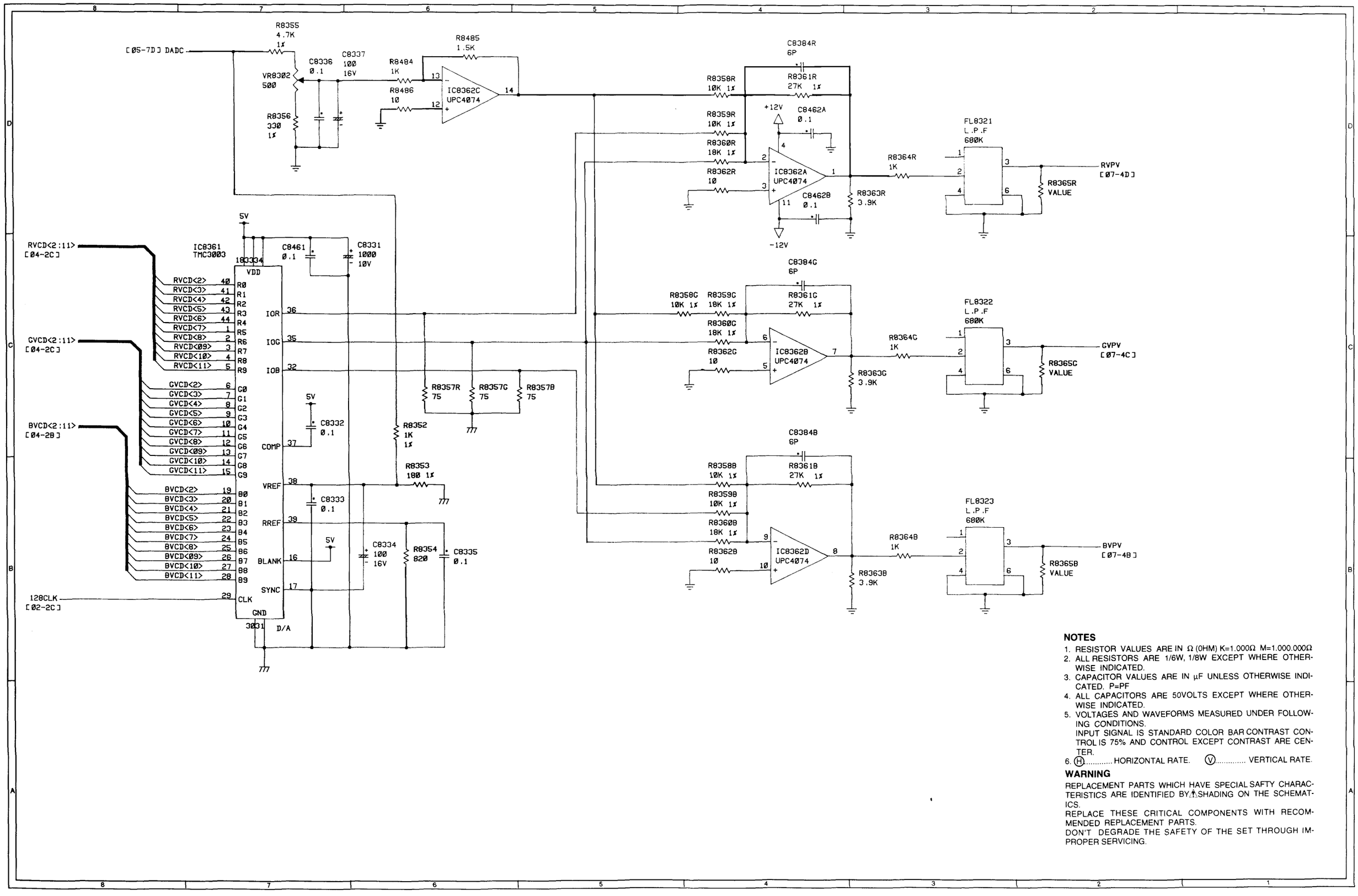

NOTES

1. RESISTOR VALUES ARE IN Ω (OHM) K=1.000Ω M=1.000.000Ω
2. ALL RESISTORS ARE 1/6W, 1/8W EXCEPT WHERE OTHERWISE INDICATED.
3. CAPACITOR VALUES ARE IN μF UNLESS OTHERWISE INDICATED. P=PF
4. ALL CAPACITORS ARE 50VOLTS EXCEPT WHERE OTHERWISE INDICATED.
5. VOLTAGES AND WAVEFORMS MEASURED UNDER FOLLOWING CONDITIONS.
   INPUT SIGNAL IS STANDARD COLOR BAR CONTRAST CONTROL IS 75% AND CONTROL EXCEPT CONTRAST ARE CENTER.
6. Ⓗ..... HORIZONTAL RATE. Ⓥ..... VERTICAL RATE.

WARNING

REPLACEMENT PARTS WHICH HAVE SPECIAL SAFTY CHARACTERISTICS ARE IDENTIFIED BY ⚠ SHADING ON THE SCHEMATICS.
REPLACE THESE CRITICAL COMPONENTS WITH RECOMMENDED REPLACEMENT PARTS.
DON'T DEGRADE THE SAFETY OF THE SET THROUGH IMPROPER SERVICING.

D-CONV PWB (PWC-4190) (7/12)

NOTES

1. RESISTOR VALUES ARE IN Ω (OHM) K=1.000Ω M=1.000.000Ω
2. ALL RESISTORS ARE 1/6W, 1/8W EXCEPT WHERE OTHERWISE INDICATED.
3. CAPACITOR VALUES ARE IN μF UNLESS OTHERWISE INDICATED. P=PF
4. ALL CAPACITORS ARE 50VOLTS EXCEPT WHERE OTHERWISE INDICATED.
5. VOLTAGES AND WAVEFORMS MEASURED UNDER FOLLOWING CONDITIONS.
   INPUT SIGNAL IS STANDARD COLOR BAR CONTRAST CONTROL IS 75% AND CONTROL EXCEPT CONTRAST ARE CENTER.
6. Ⓗ..... HORIZONTAL RATE. Ⓥ..... VERTICAL RATE.

WARNING

REPLACEMENT PARTS WHICH HAVE SPECIAL SAFTY CHARACTERISTICS ARE IDENTIFIED BY⚠SHADING ON THE SCHEMATICS.
REPLACE THESE CRITICAL COMPONENTS WITH RECOMMENDED REPLACEMENT PARTS.
DON'T DEGRADE THE SAFETY OF THE SET THROUGH IMPROPER SERVICING.

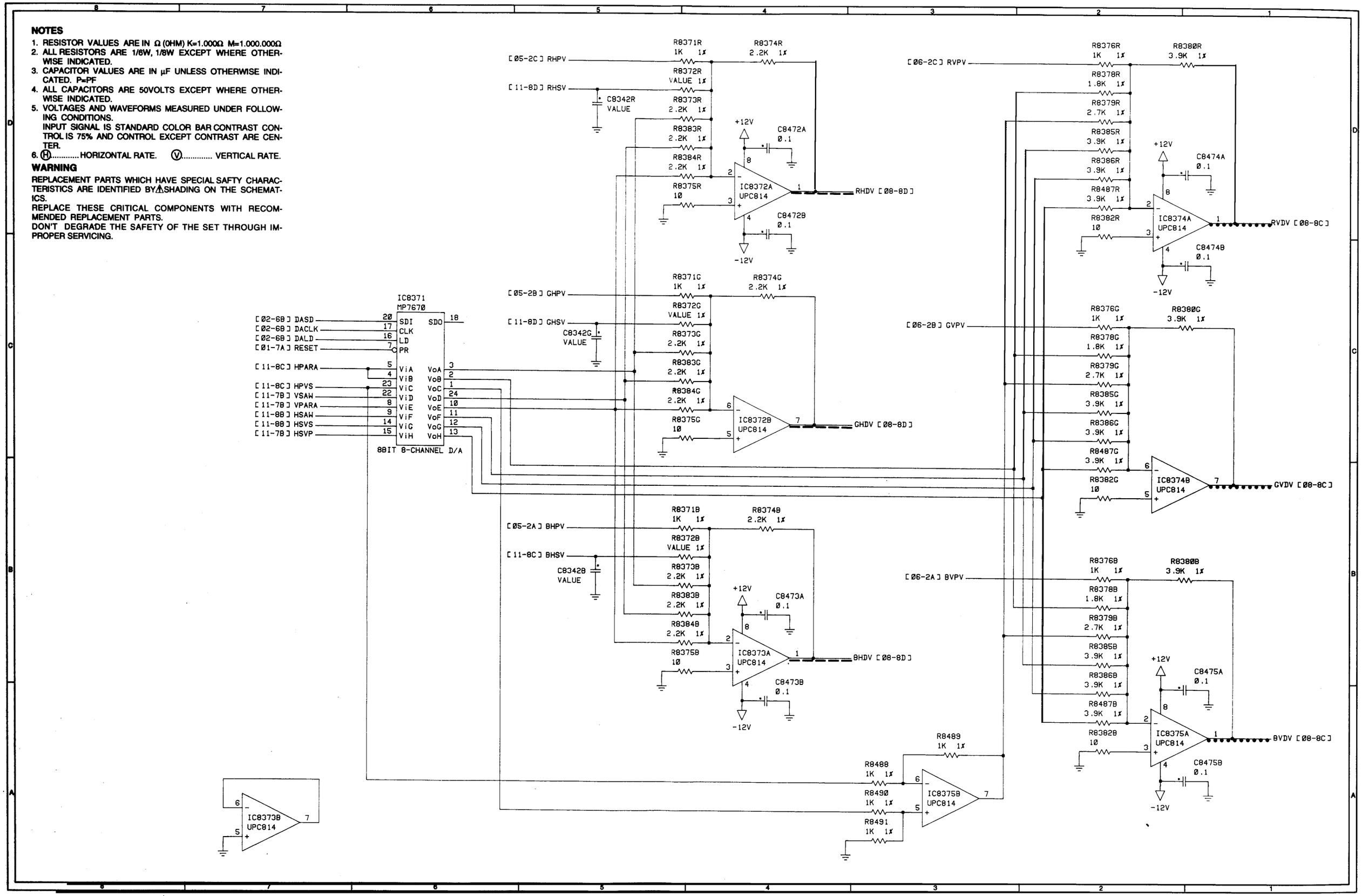

D-CONV PWB (PWC-4190) (8/12)

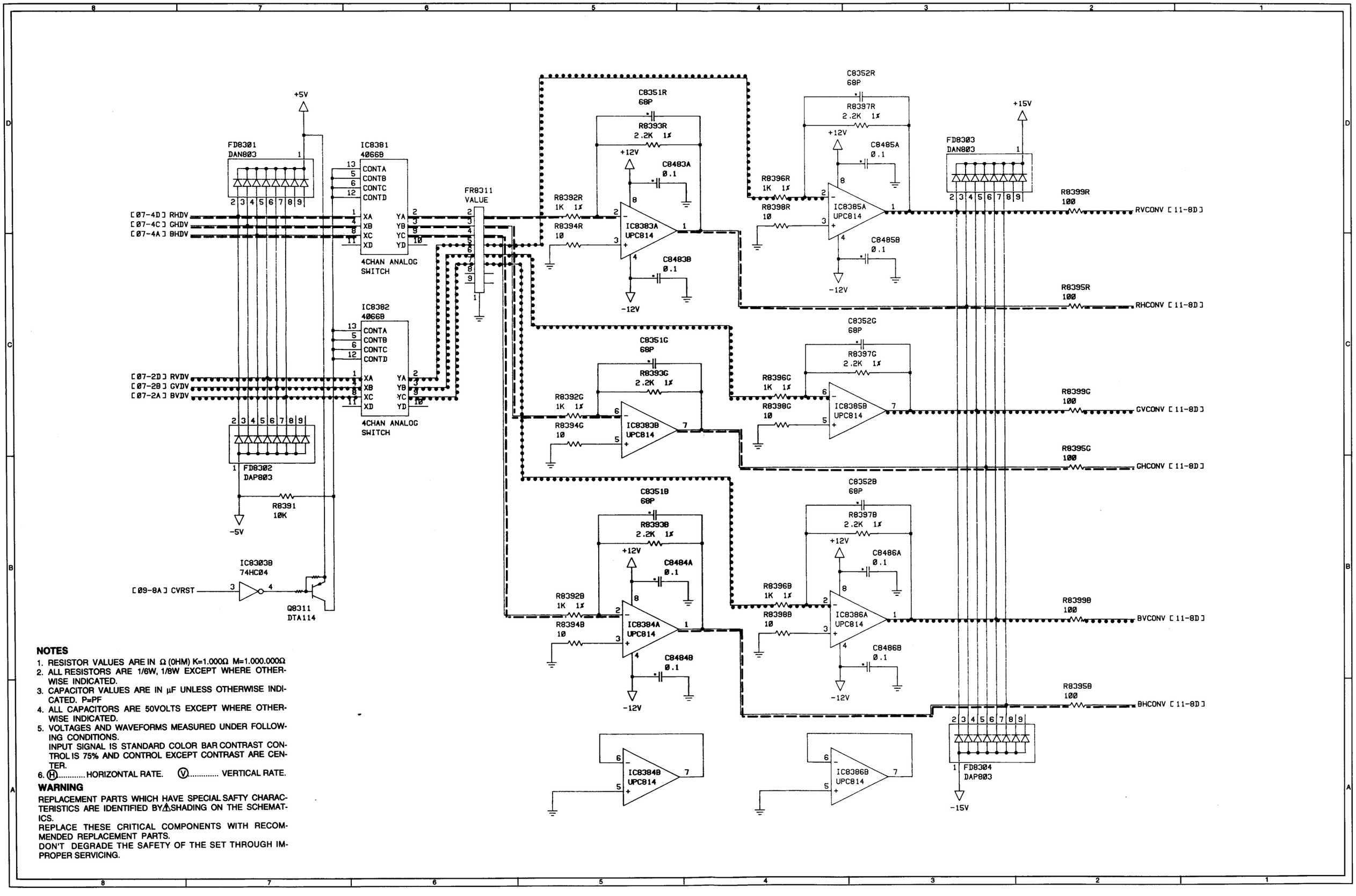

NOTES

1. RESISTOR VALUES ARE IN Ω (OHM) K=1,000Ω M=1,000,000Ω
2. ALL RESISTORS ARE 1/6W, 1/8W EXCEPT WHERE OTHERWISE INDICATED.
3. CAPACITOR VALUES ARE IN μF UNLESS OTHERWISE INDICATED. P=PF
4. ALL CAPACITORS ARE 50VOLTS EXCEPT WHERE OTHERWISE INDICATED.
5. VOLTAGES AND WAVEFORMS MEASURED UNDER FOLLOWING CONDITIONS.
   INPUT SIGNAL IS STANDARD COLOR BAR CONTRAST CONTROL IS 75% AND CONTROL EXCEPT CONTRAST ARE CENTER.
6. Ⓗ..... HORIZONTAL RATE. Ⓥ..... VERTICAL RATE.

WARNING

REPLACEMENT PARTS WHICH HAVE SPECIAL SAFTY CHARACTERISTICS ARE IDENTIFIED BY⚠SHADING ON THE SCHEMATICS.
REPLACE THESE CRITICAL COMPONENTS WITH RECOMMENDED REPLACEMENT PARTS.
DON'T DEGRADE THE SAFETY OF THE SET THROUGH IMPROPER SERVICING.

D-CONV PWB (PWC-4190) (9/12)

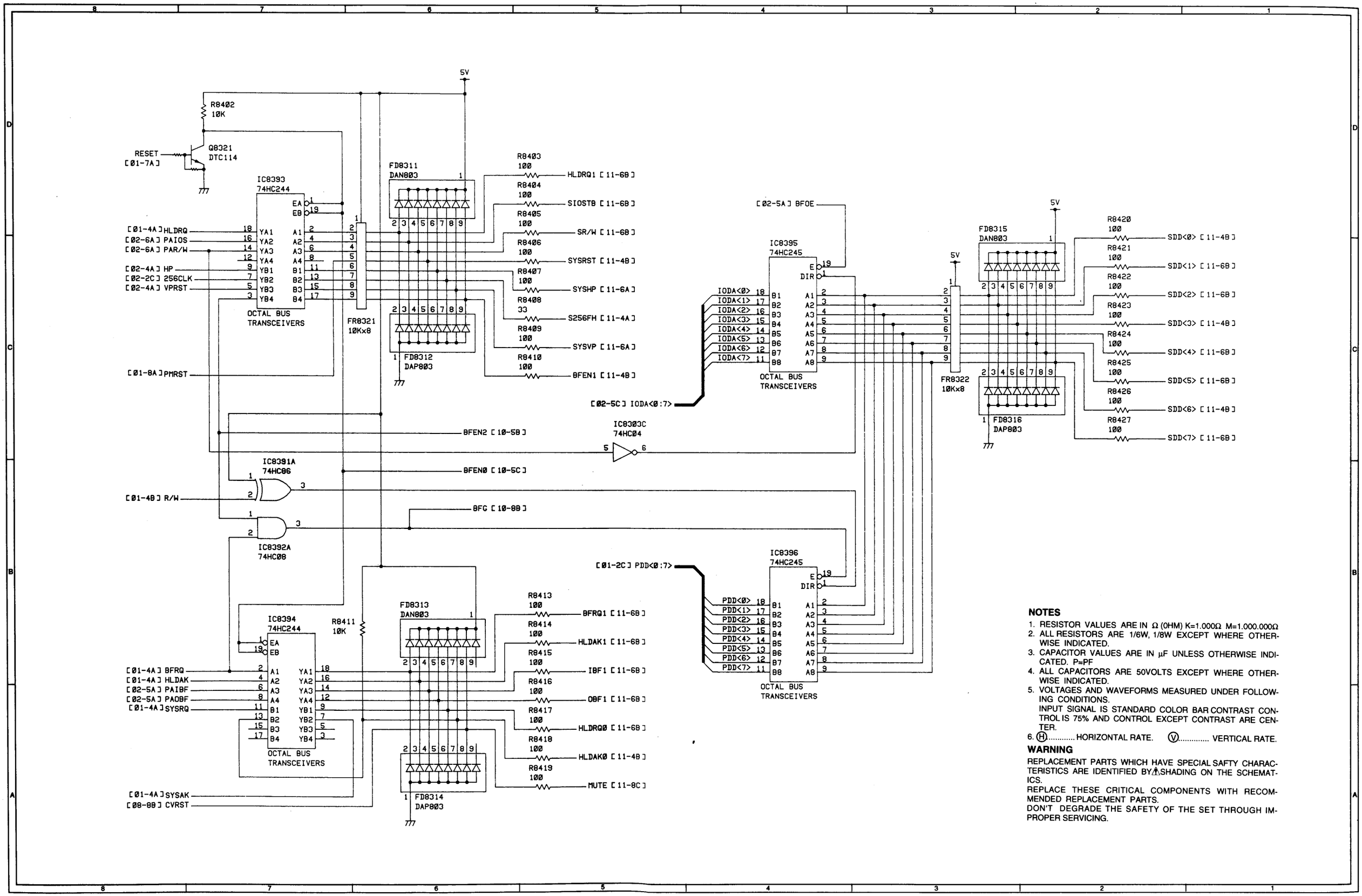

NOTES

1. RESISTOR VALUES ARE IN Ω (OHM) K=1.000Ω M=1.000.000Ω
2. ALL RESISTORS ARE 1/6W, 1/8W EXCEPT WHERE OTHERWISE INDICATED.
3. CAPACITOR VALUES ARE IN μF UNLESS OTHERWISE INDICATED. P=PF
4. ALL CAPACITORS ARE 50VOLTS EXCEPT WHERE OTHERWISE INDICATED.
5. VOLTAGES AND WAVEFORMS MEASURED UNDER FOLLOWING CONDITIONS.
   INPUT SIGNAL IS STANDARD COLOR BAR CONTRAST CONTROL IS 75% AND CONTROL EXCEPT CONTRAST ARE CENTER.
6. Ⓗ..... HORIZONTAL RATE. Ⓥ..... VERTICAL RATE.

WARNING

REPLACEMENT PARTS WHICH HAVE SPECIAL SAFTY CHARACTERISTICS ARE IDENTIFIED BY ⚠ SHADING ON THE SCHEMATICS.
REPLACE THESE CRITICAL COMPONENTS WITH RECOMMENDED REPLACEMENT PARTS.
DON'T DEGRADE THE SAFETY OF THE SET THROUGH IMPROPER SERVICING.

D-CONV PWB (PWC-4190) (10/12)

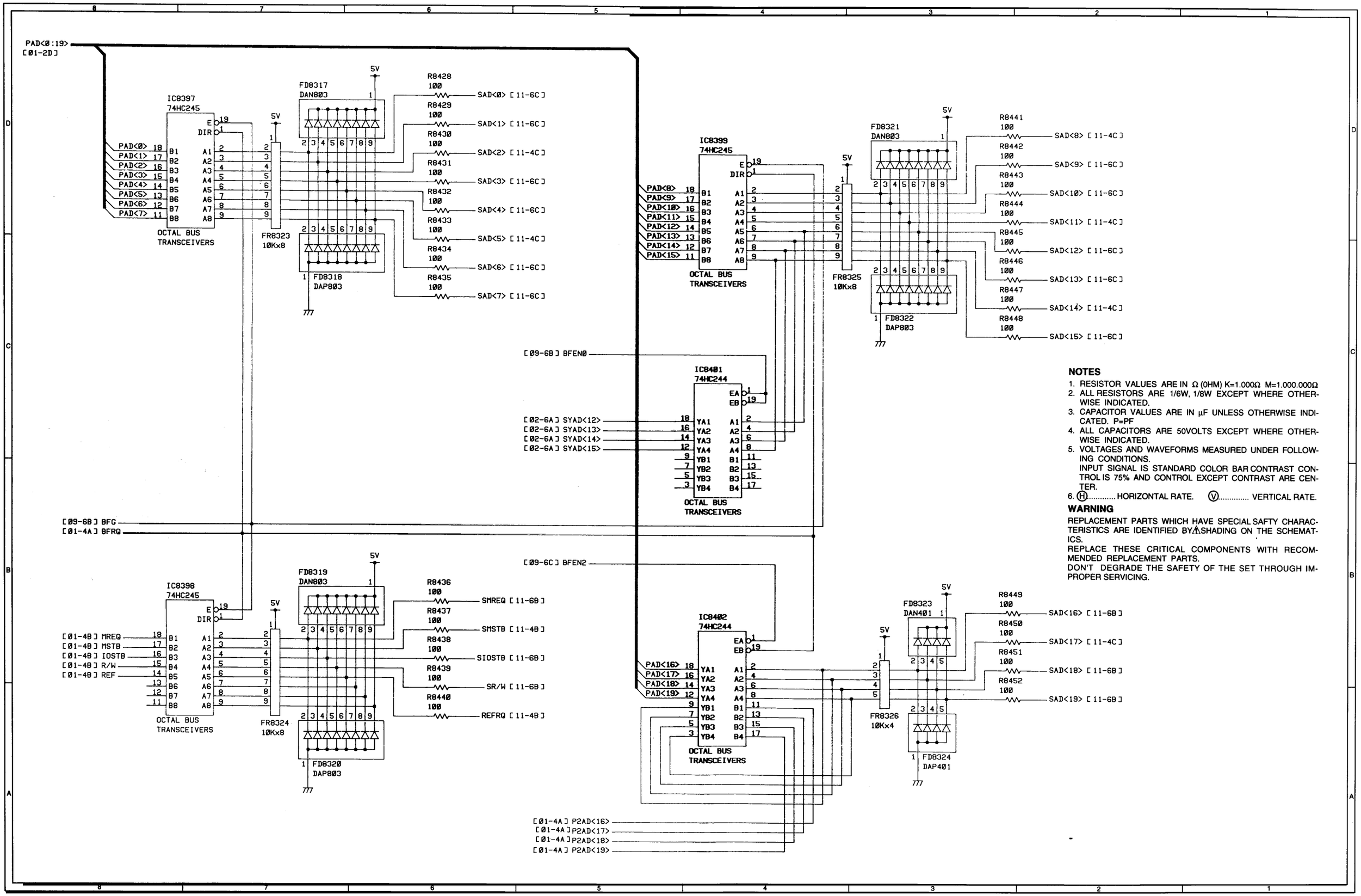

NOTES

1. RESISTOR VALUES ARE IN Ω (OHM) K=1.000Ω M=1.000.000Ω
2. ALL RESISTORS ARE 1/6W, 1/8W EXCEPT WHERE OTHERWISE INDICATED.
3. CAPACITOR VALUES ARE IN μF UNLESS OTHERWISE INDICATED. P=PF
4. ALL CAPACITORS ARE 50VOLTS EXCEPT WHERE OTHERWISE INDICATED.
5. VOLTAGES AND WAVEFORMS MEASURED UNDER FOLLOWING CONDITIONS.
   INPUT SIGNAL IS STANDARD COLOR BAR CONTRAST CONTROL IS 75% AND CONTROL EXCEPT CONTRAST ARE CENTER.
6. Ⓗ..... HORIZONTAL RATE. Ⓥ..... VERTICAL RATE.

WARNING

REPLACEMENT PARTS WHICH HAVE SPECIAL SAFTY CHARACTERISTICS ARE IDENTIFIED BY ⚠ SHADING ON THE SCHEMATICS.
REPLACE THESE CRITICAL COMPONENTS WITH RECOMMENDED REPLACEMENT PARTS.
DON'T DEGRADE THE SAFETY OF THE SET THROUGH IMPROPER SERVICING.

D-CONV PWB (PWC-4190) (11/12)

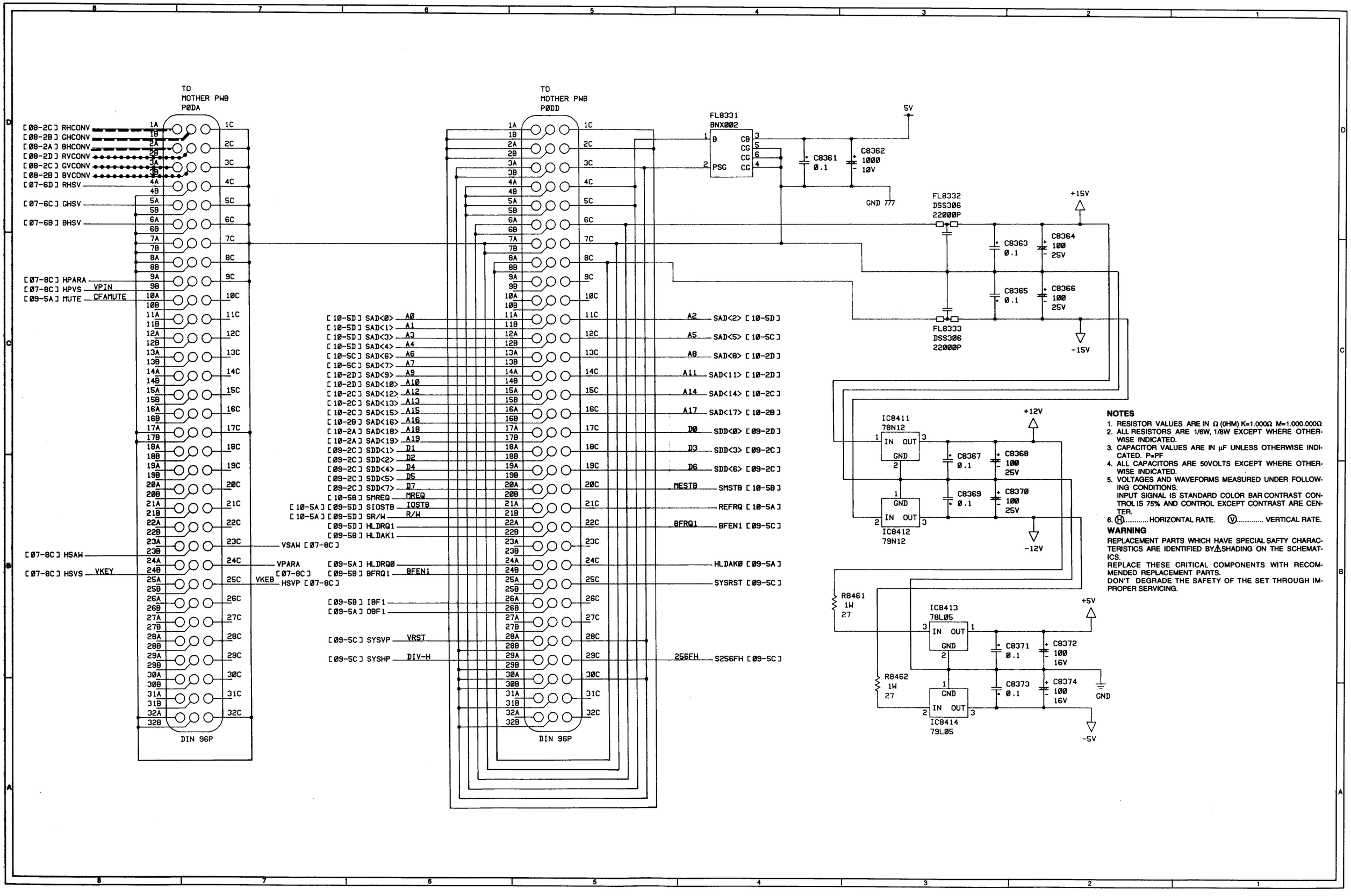

NOTES

1. RESISTOR VALUES ARE IN Ω (OHM) K=1.000Ω M=1.000.000Ω
2. ALL RESISTORS ARE 1/6W, 1/8W EXCEPT WHERE OTHERWISE INDICATED.
3. CAPACITOR VALUES ARE IN μF UNLESS OTHERWISE INDICATED. P=PF
4. ALL CAPACITORS ARE 50VOLTS EXCEPT WHERE OTHERWISE INDICATED.
5. VOLTAGES AND WAVEFORMS MEASURED UNDER FOLLOWING CONDITIONS.
   INPUT SIGNAL IS STANDARD COLOR BAR CONTRAST CONTROL IS 75% AND CONTROL EXCEPT CONTRAST ARE CENTER.
6. Ⓗ..... HORIZONTAL RATE. Ⓥ..... VERTICAL RATE.

WARNING

REPLACEMENT PARTS WHICH HAVE SPECIAL SAFTY CHARACTERISTICS ARE IDENTIFIED BY ⚠ SHADING ON THE SCHEMATICS.
REPLACE THESE CRITICAL COMPONENTS WITH RECOMMENDED REPLACEMENT PARTS.
DON'T DEGRADE THE SAFETY OF THE SET THROUGH IMPROPER SERVICING.

D-CONV PWB (PWC-4190) (12/12)

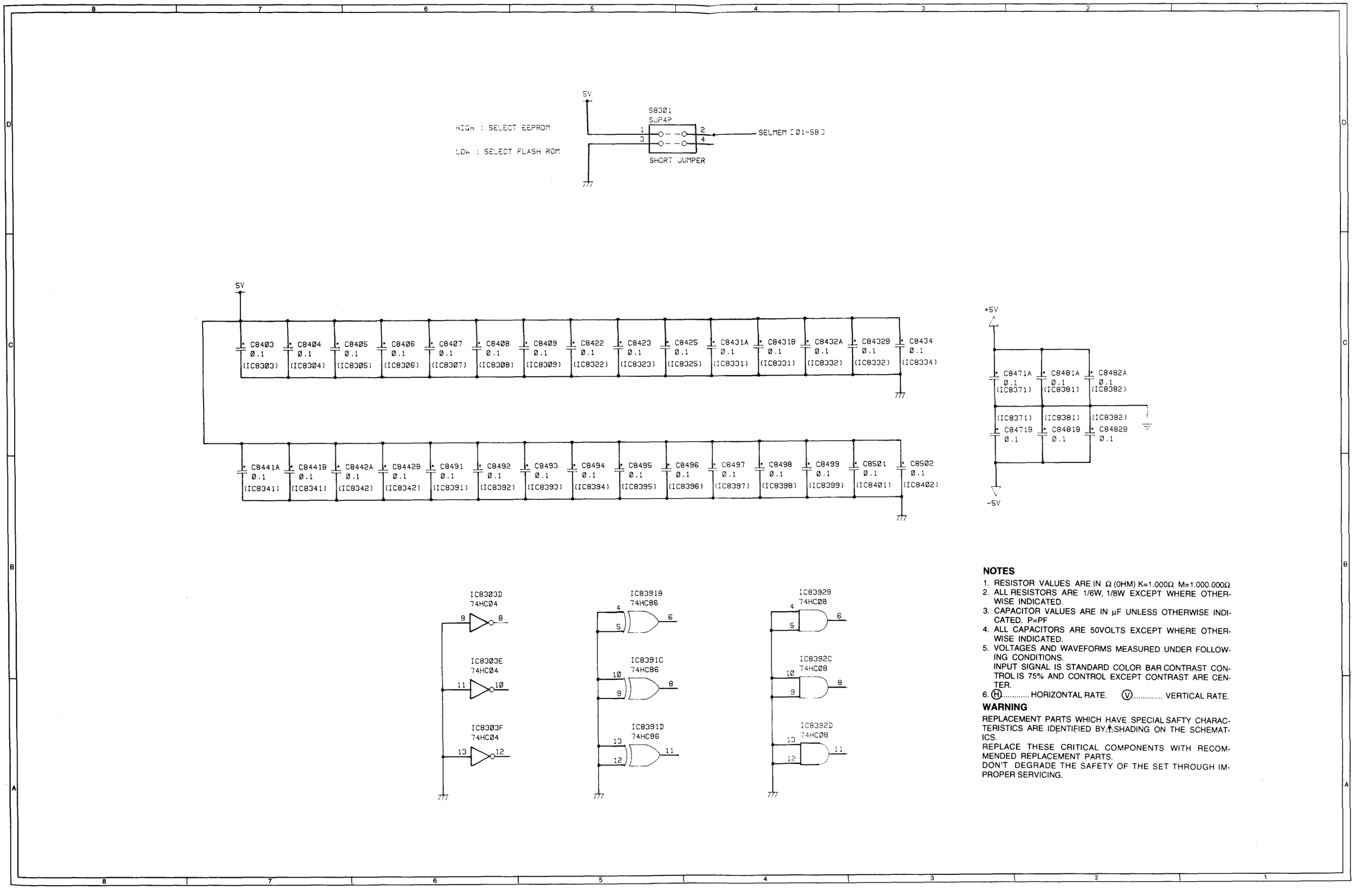

NOTES

1. RESISTOR VALUES ARE IN Ω (OHM) K=1.000Ω M=1.000.000Ω
2. ALL RESISTORS ARE 1/6W, 1/8W EXCEPT WHERE OTHERWISE INDICATED.
3. CAPACITOR VALUES ARE IN μF UNLESS OTHERWISE INDICATED. P=PF
4. ALL CAPACITORS ARE 50VOLTS EXCEPT WHERE OTHERWISE INDICATED.
5. VOLTAGES AND WAVEFORMS MEASURED UNDER FOLLOWING CONDITIONS.
   INPUT SIGNAL IS STANDARD COLOR BAR CONTRAST CONTROL IS 75% AND CONTROL EXCEPT CONTRAST ARE CENTER.
6. Ⓗ..... HORIZONTAL RATE. Ⓥ..... VERTICAL RATE.

WARNING

REPLACEMENT PARTS WHICH HAVE SPECIAL SAFTY CHARACTERISTICS ARE IDENTIFIED BY ⚠ SHADING ON THE SCHEMATICS.
REPLACE THESE CRITICAL COMPONENTS WITH RECOMMENDED REPLACEMENT PARTS.
DON'T DEGRADE THE SAFETY OF THE SET THROUGH IMPROPER SERVICING.

D-CONV PWB (PWC-4190)
PARTS SIDE

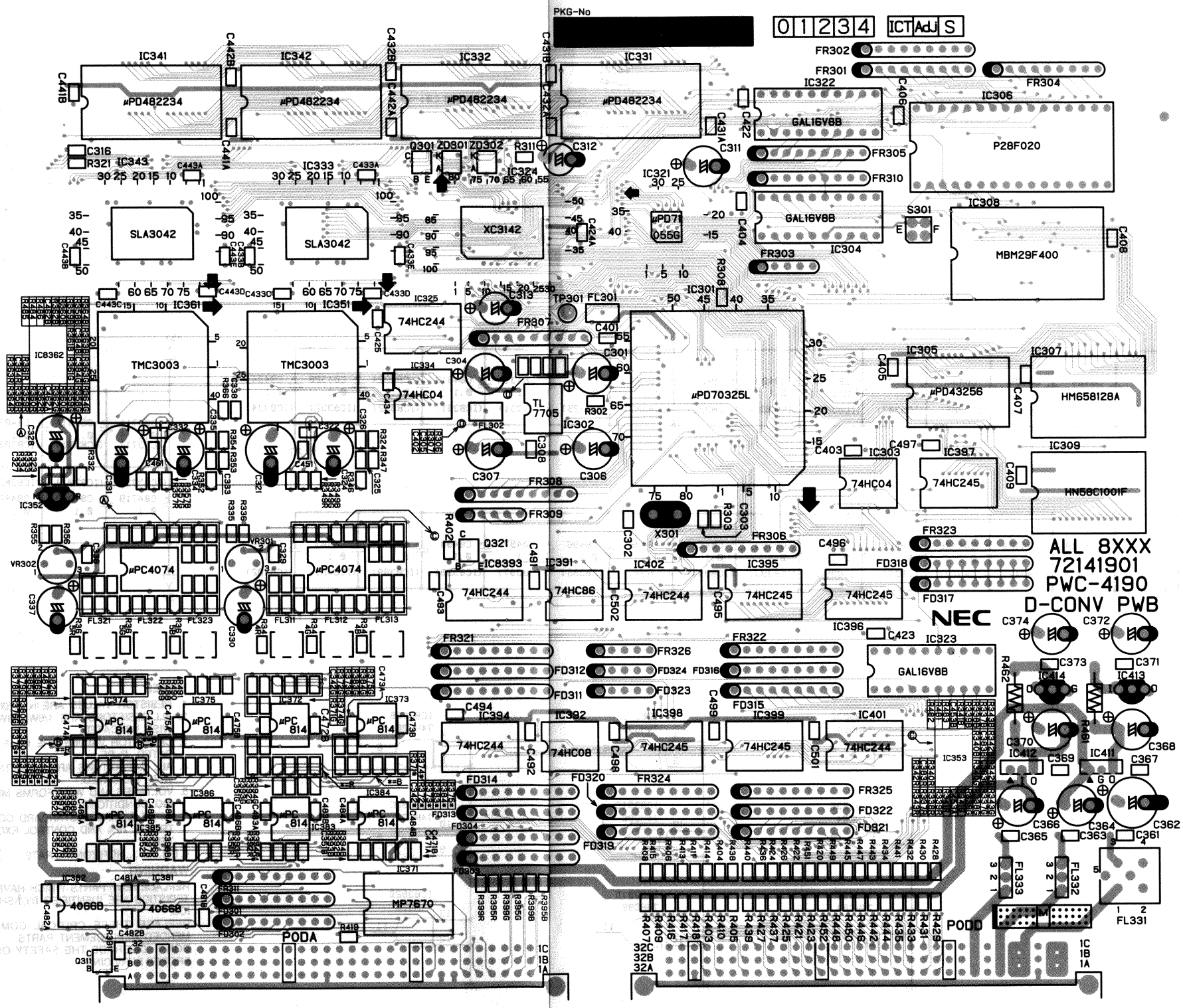

D-CONV PWB (PWC-4190)
SOLDER SIDE

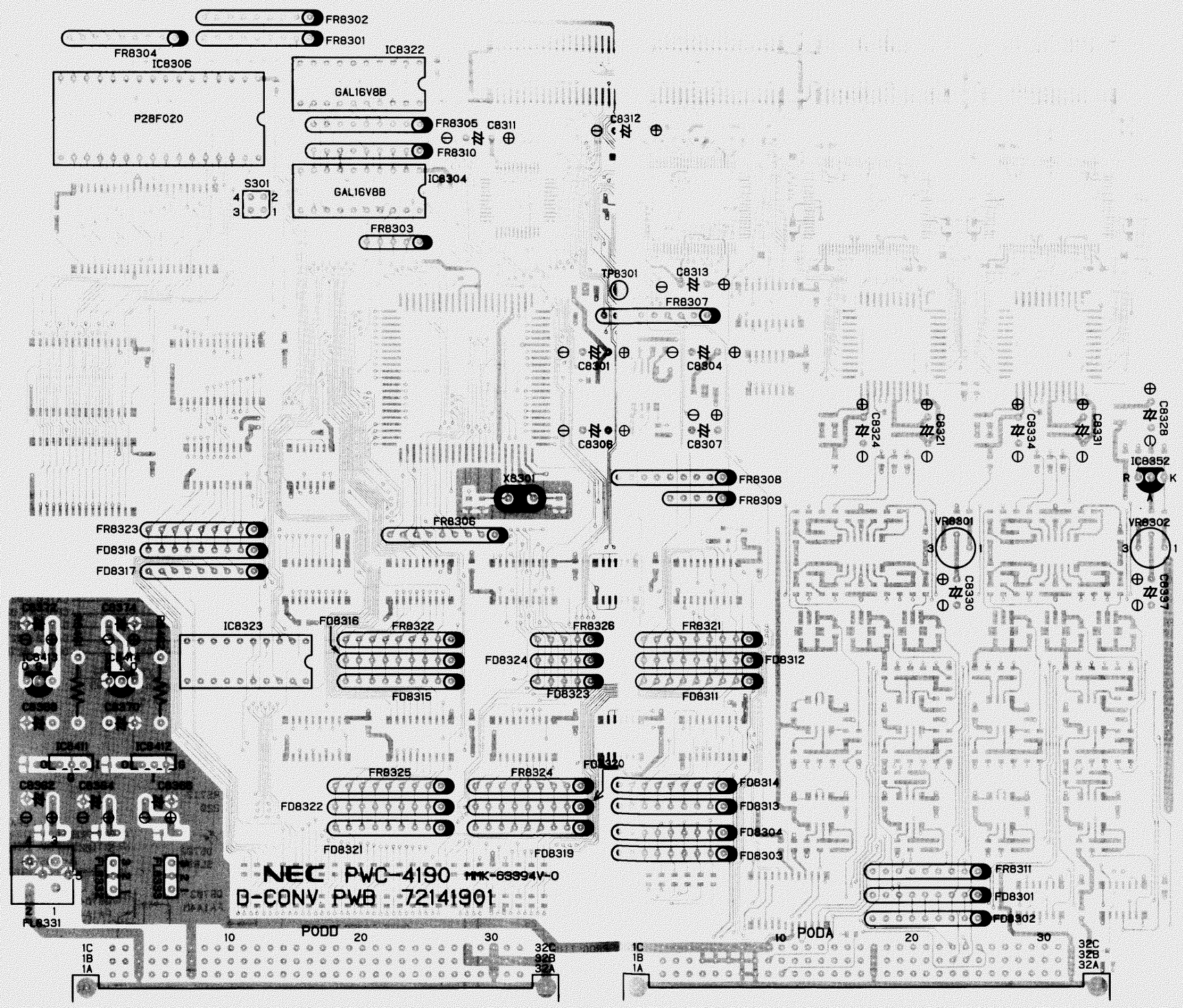

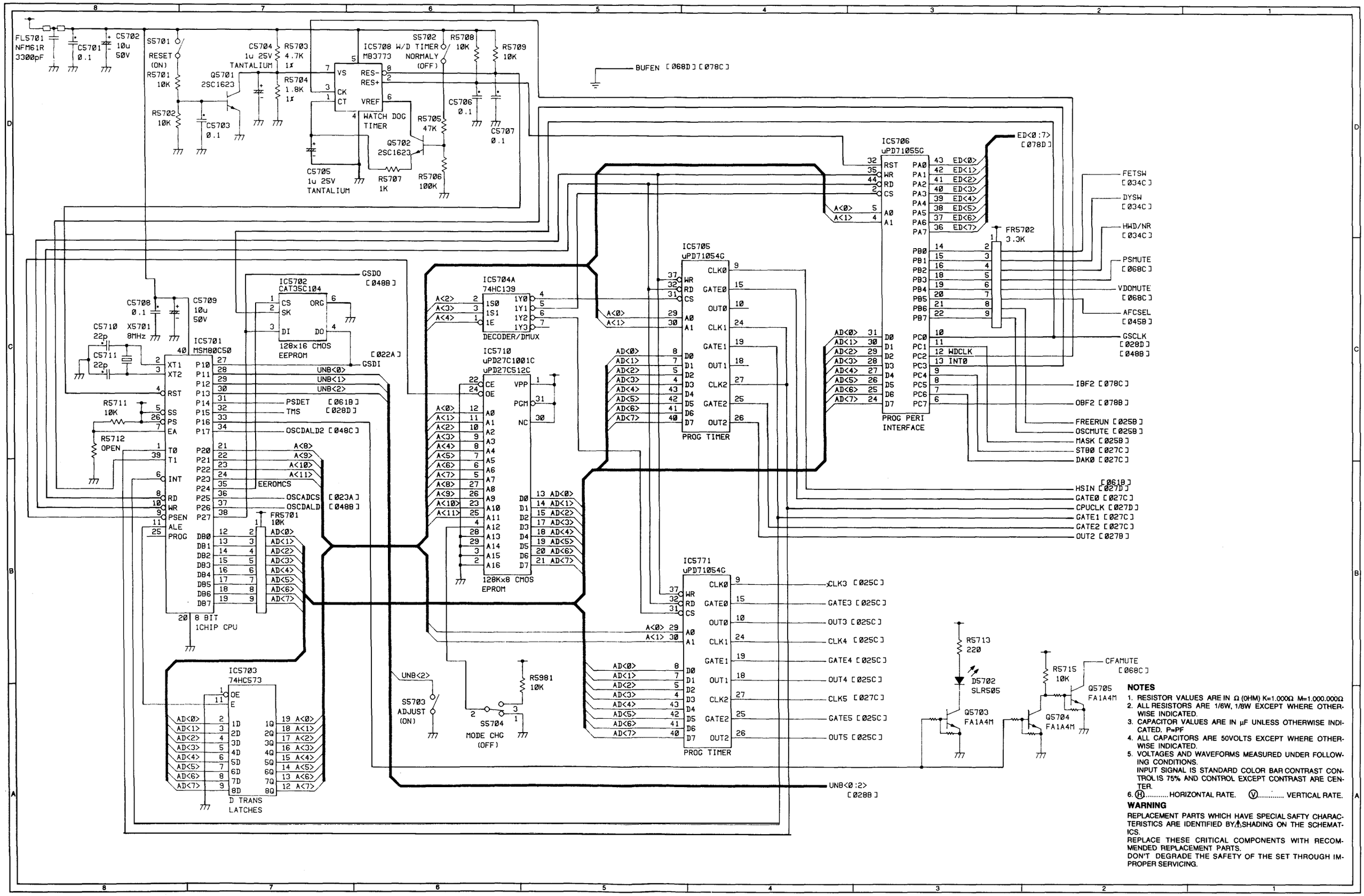

NOTES

1. RESISTOR VALUES ARE IN Ω (OHM) K=1,000Ω M=1,000,000Ω
2. ALL RESISTORS ARE 1/6W, 1/8W EXCEPT WHERE OTHERWISE INDICATED.
3. CAPACITOR VALUES ARE IN μF UNLESS OTHERWISE INDICATED. P=PF
4. ALL CAPACITORS ARE 50VOLTS EXCEPT WHERE OTHERWISE INDICATED.
5. VOLTAGES AND WAVEFORMS MEASURED UNDER FOLLOWING CONDITIONS.
   INPUT SIGNAL IS STANDARD COLOR BAR CONTRAST CONTROL IS 75% AND CONTROL EXCEPT CONTRAST ARE CENTER.
6. Ⓗ..... HORIZONTAL RATE. Ⓥ..... VERTICAL RATE.

WARNING

REPLACEMENT PARTS WHICH HAVE SPECIAL SAFTY CHARACTERISTICS ARE IDENTIFIED BY ⚠ SHADING ON THE SCHEMATICS.
REPLACE THESE CRITICAL COMPONENTS WITH RECOMMENDED REPLACEMENT PARTS.
DON'T DEGRADE THE SAFETY OF THE SET THROUGH IMPROPER SERVICING.

OSC PWB (PWC-4189) (2/7)

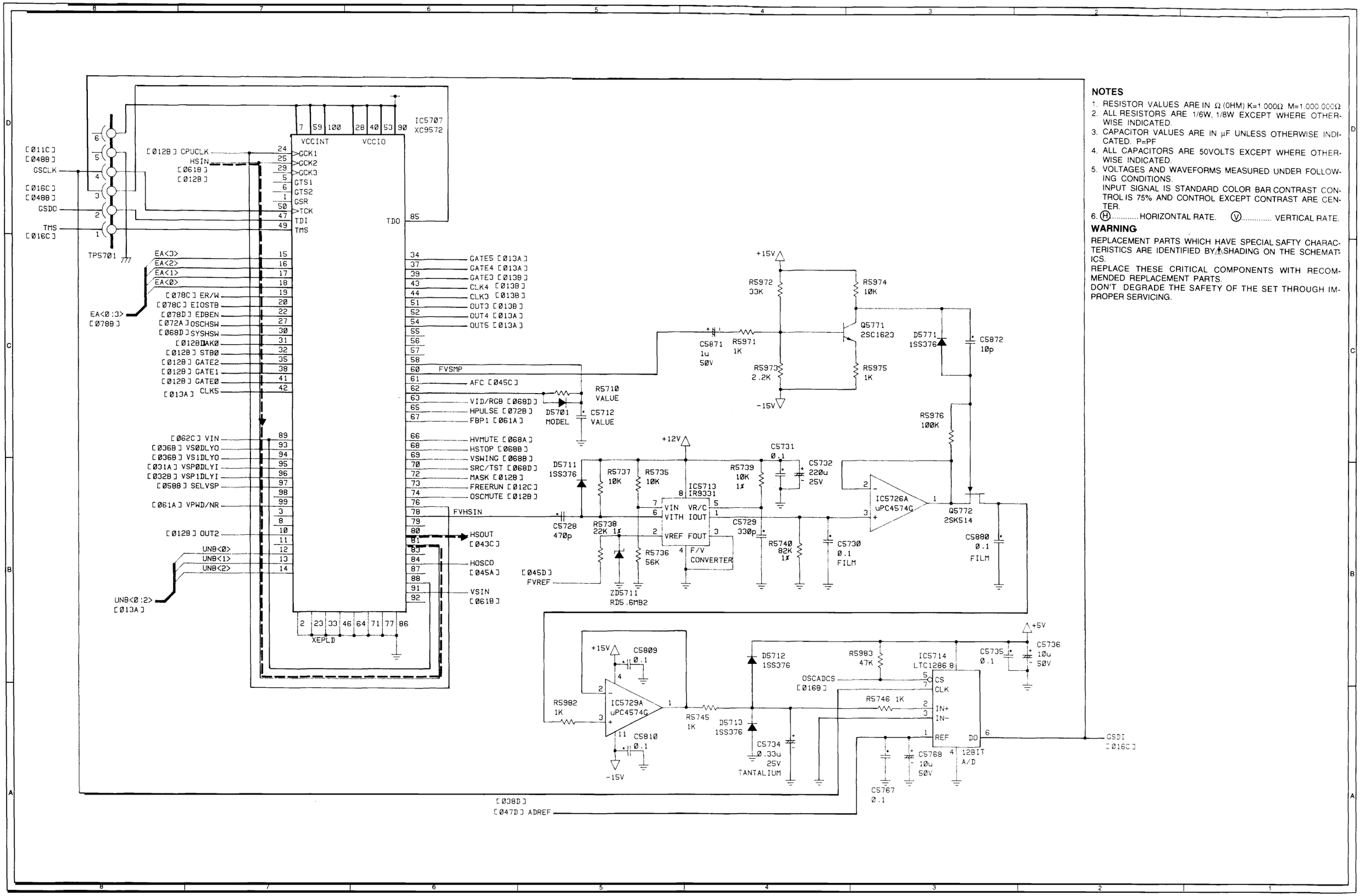

NOTES

1. RESISTOR VALUES ARE IN Ω (OHM) K=1,000Ω M=1,000,000Ω
2. ALL RESISTORS ARE 1/6W, 1/8W EXCEPT WHERE OTHERWISE INDICATED.
3. CAPACITOR VALUES ARE IN μF UNLESS OTHERWISE INDICATED. P=PF
4. ALL CAPACITORS ARE 50VOLTS EXCEPT WHERE OTHERWISE INDICATED.
5. VOLTAGES AND WAVEFORMS MEASURED UNDER FOLLOWING CONDITIONS.
   INPUT SIGNAL IS STANDARD COLOR BAR CONTRAST CONTROL IS 75% AND CONTROL EXCEPT CONTRAST ARE CENTER.
6. Ⓗ..... HORIZONTAL RATE. Ⓥ..... VERTICAL RATE.

WARNING

REPLACEMENT PARTS WHICH HAVE SPECIAL SAFTY CHARACTERISTICS ARE IDENTIFIED BY ⚠ SHADING ON THE SCHEMATICS.
REPLACE THESE CRITICAL COMPONENTS WITH RECOMMENDED REPLACEMENT PARTS.
DON'T DEGRADE THE SAFETY OF THE SET THROUGH IMPROPER SERVICING.

OSC PWB (PWC-4189) (3/7)

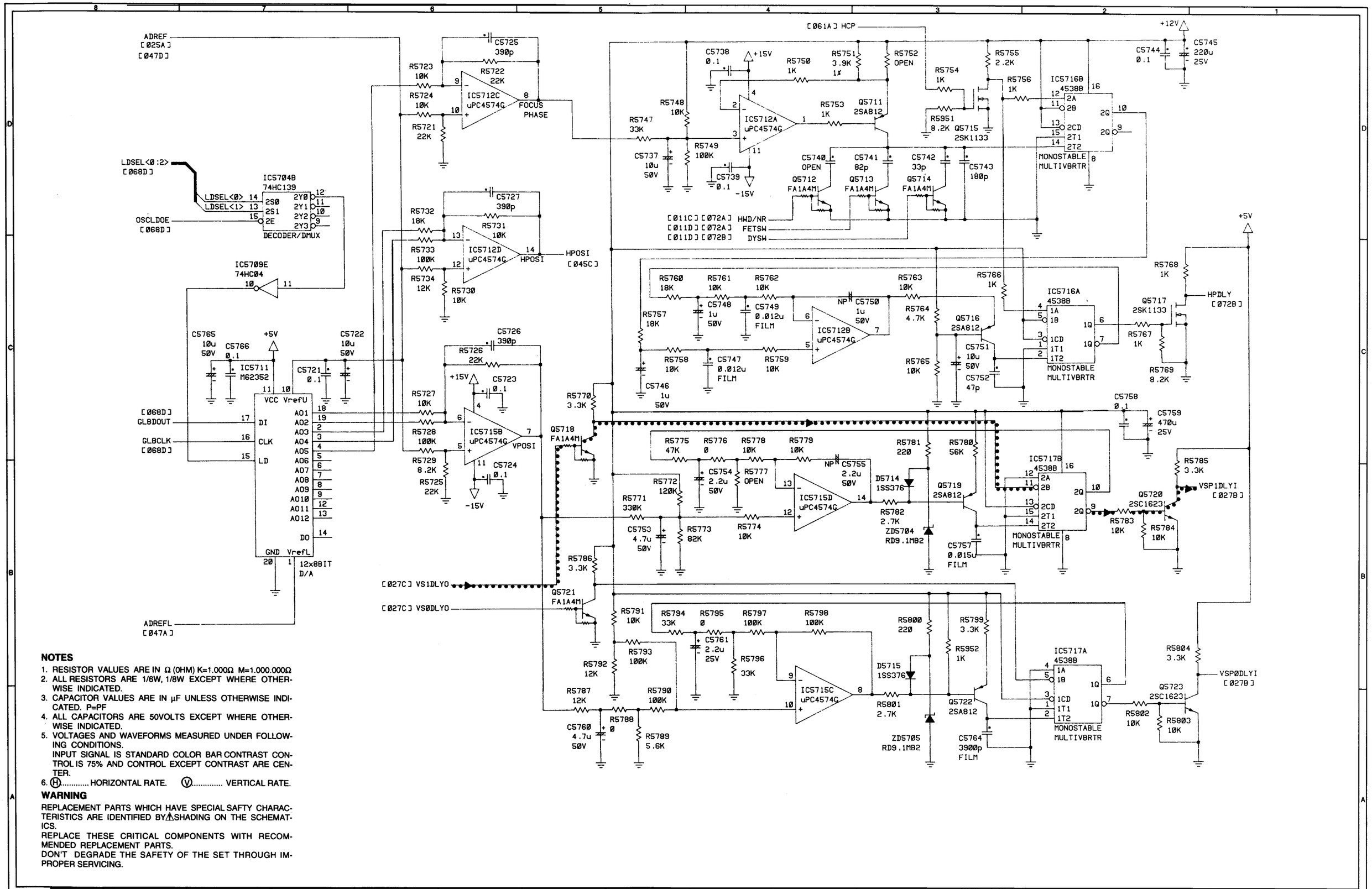

NOTES

1. RESISTOR VALUES ARE IN Ω (OHM) K=1.000Ω M=1.000.000Ω
2. ALL RESISTORS ARE 1/6W, 1/8W EXCEPT WHERE OTHERWISE INDICATED.
3. CAPACITOR VALUES ARE IN μF UNLESS OTHERWISE INDICATED. P=PF
4. ALL CAPACITORS ARE 50VOLTS EXCEPT WHERE OTHERWISE INDICATED.
5. VOLTAGES AND WAVEFORMS MEASURED UNDER FOLLOWING CONDITIONS.
   INPUT SIGNAL IS STANDARD COLOR BAR CONTRAST CONTROL IS 75% AND CONTROL EXCEPT CONTRAST ARE CENTER.
6. Ⓗ..... HORIZONTAL RATE. Ⓥ..... VERTICAL RATE.

WARNING

REPLACEMENT PARTS WHICH HAVE SPECIAL SAFTY CHARACTERISTICS ARE IDENTIFIED BY ⚠ SHADING ON THE SCHEMATICS.
REPLACE THESE CRITICAL COMPONENTS WITH RECOMMENDED REPLACEMENT PARTS.
DON'T DEGRADE THE SAFETY OF THE SET THROUGH IMPROPER SERVICING.

OSC PWB (PWC-4189) (4/7)

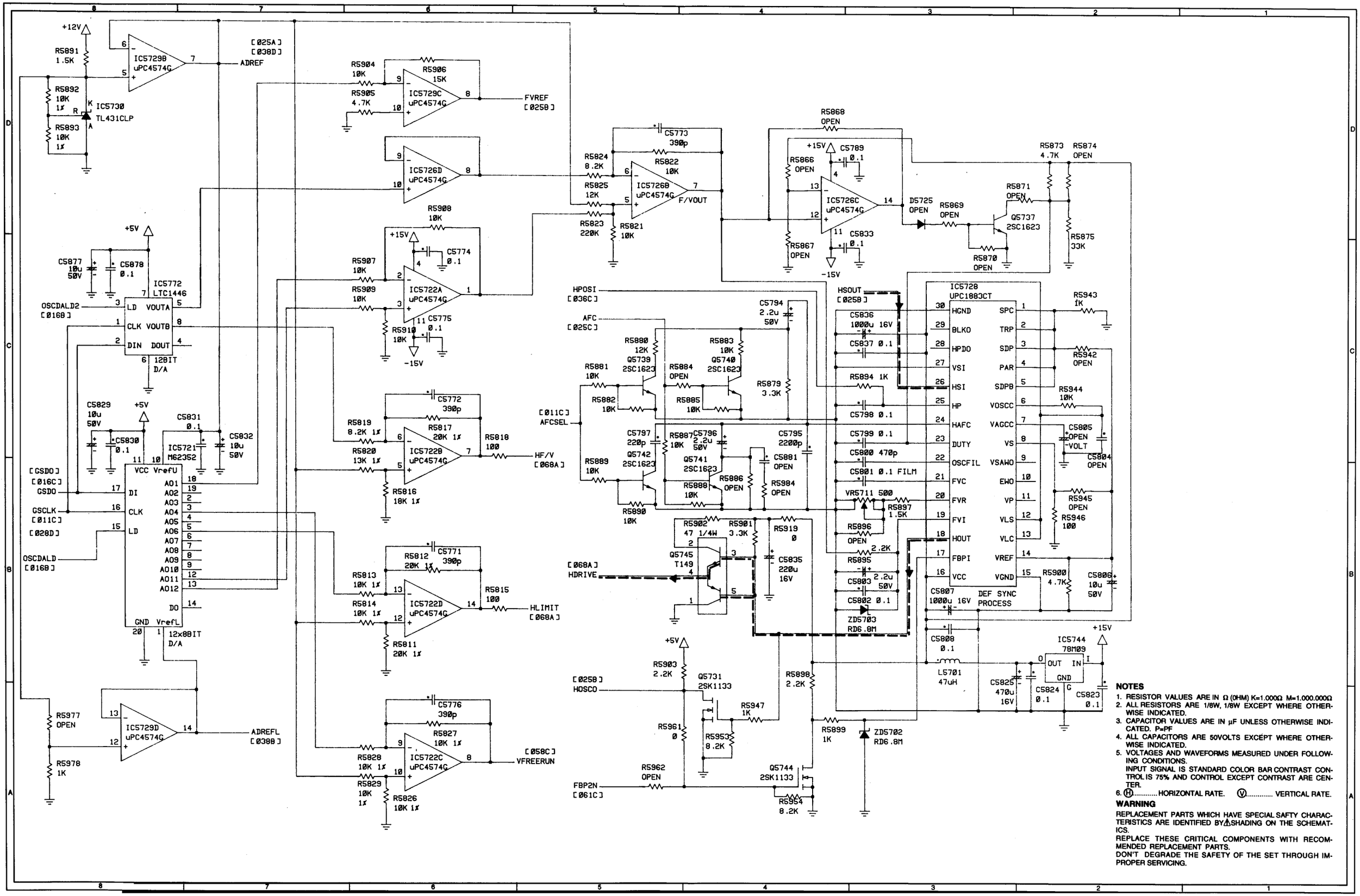

NOTES

1. RESISTOR VALUES ARE IN Ω (OHM) K=1.000Ω M=1.000.000Ω
2. ALL RESISTORS ARE 1/6W, 1/8W EXCEPT WHERE OTHERWISE INDICATED.
3. CAPACITOR VALUES ARE IN μF UNLESS OTHERWISE INDICATED. P=PF
4. ALL CAPACITORS ARE 50VOLTS EXCEPT WHERE OTHERWISE INDICATED.
5. VOLTAGES AND WAVEFORMS MEASURED UNDER FOLLOWING CONDITIONS.
   INPUT SIGNAL IS STANDARD COLOR BAR CONTRAST CONTROL IS 75% AND CONTROL EXCEPT CONTRAST ARE CENTER.
6. Ⓗ.....HORIZONTAL RATE. Ⓥ..... VERTICAL RATE.

WARNING

REPLACEMENT PARTS WHICH HAVE SPECIAL SAFTY CHARACTERISTICS ARE IDENTIFIED BY ⚠ SHADING ON THE SCHEMATICS.
REPLACE THESE CRITICAL COMPONENTS WITH RECOMMENDED REPLACEMENT PARTS.
DON'T DEGRADE THE SAFETY OF THE SET THROUGH IMPROPER SERVICING.

OSC PWB (PWC-4189) (5/7)

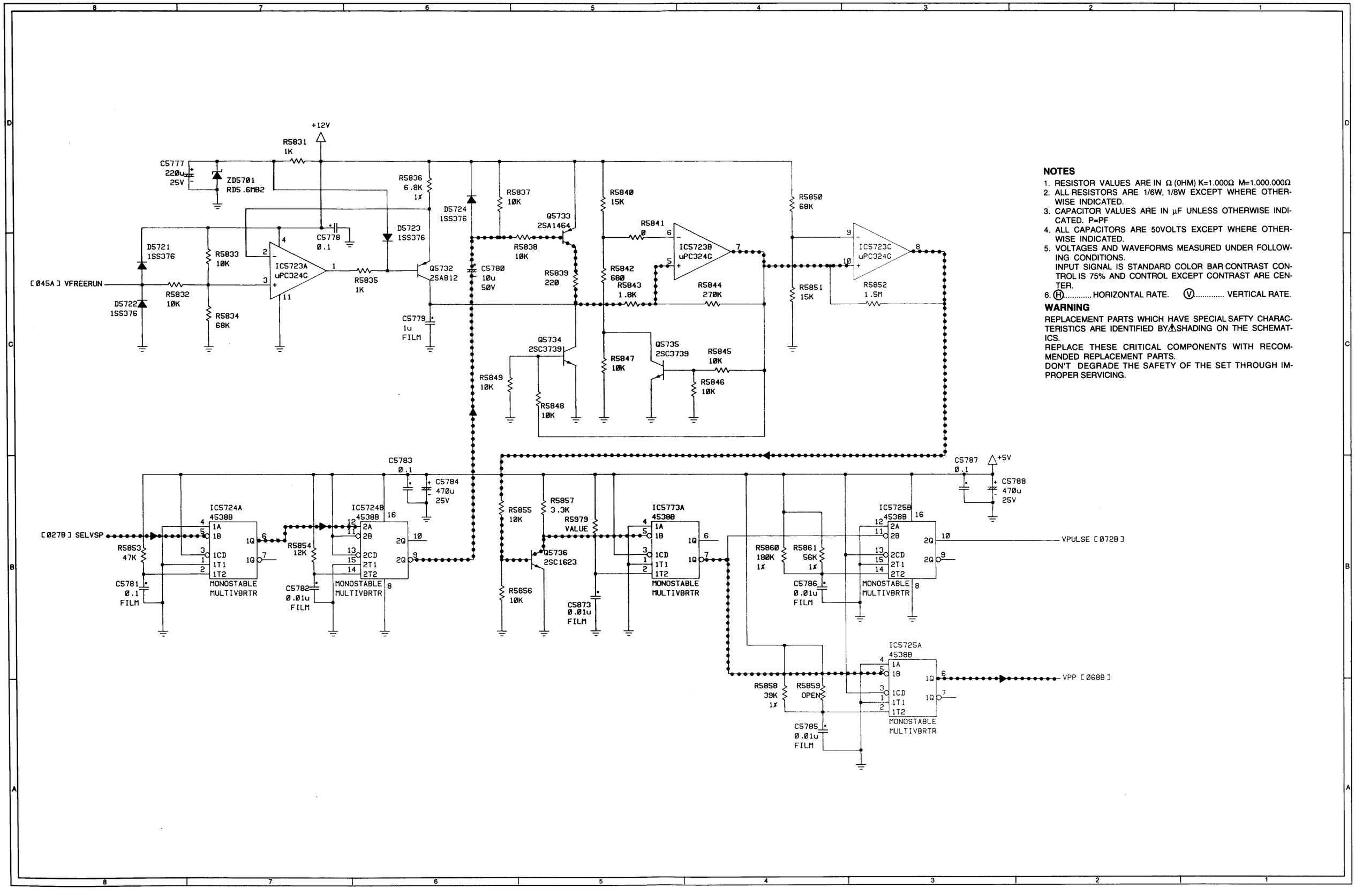

NOTES

1. RESISTOR VALUES ARE IN Ω (OHM) K=1.000Ω M=1.000.000Ω
2. ALL RESISTORS ARE 1/6W, 1/8W EXCEPT WHERE OTHERWISE INDICATED.
3. CAPACITOR VALUES ARE IN μF UNLESS OTHERWISE INDICATED. P=PF
4. ALL CAPACITORS ARE 50VOLTS EXCEPT WHERE OTHERWISE INDICATED.
5. VOLTAGES AND WAVEFORMS MEASURED UNDER FOLLOWING CONDITIONS.
   INPUT SIGNAL IS STANDARD COLOR BAR CONTRAST CONTROL IS 75% AND CONTROL EXCEPT CONTRAST ARE CENTER.
6. Ⓗ..... HORIZONTAL RATE. Ⓥ..... VERTICAL RATE.

WARNING

REPLACEMENT PARTS WHICH HAVE SPECIAL SAFTY CHARACTERISTICS ARE IDENTIFIED BY ⚠ SHADING ON THE SCHEMATICS.
REPLACE THESE CRITICAL COMPONENTS WITH RECOMMENDED REPLACEMENT PARTS.
DON'T DEGRADE THE SAFETY OF THE SET THROUGH IMPROPER SERVICING.

OSC PWB (PWC-4189) (6/7)

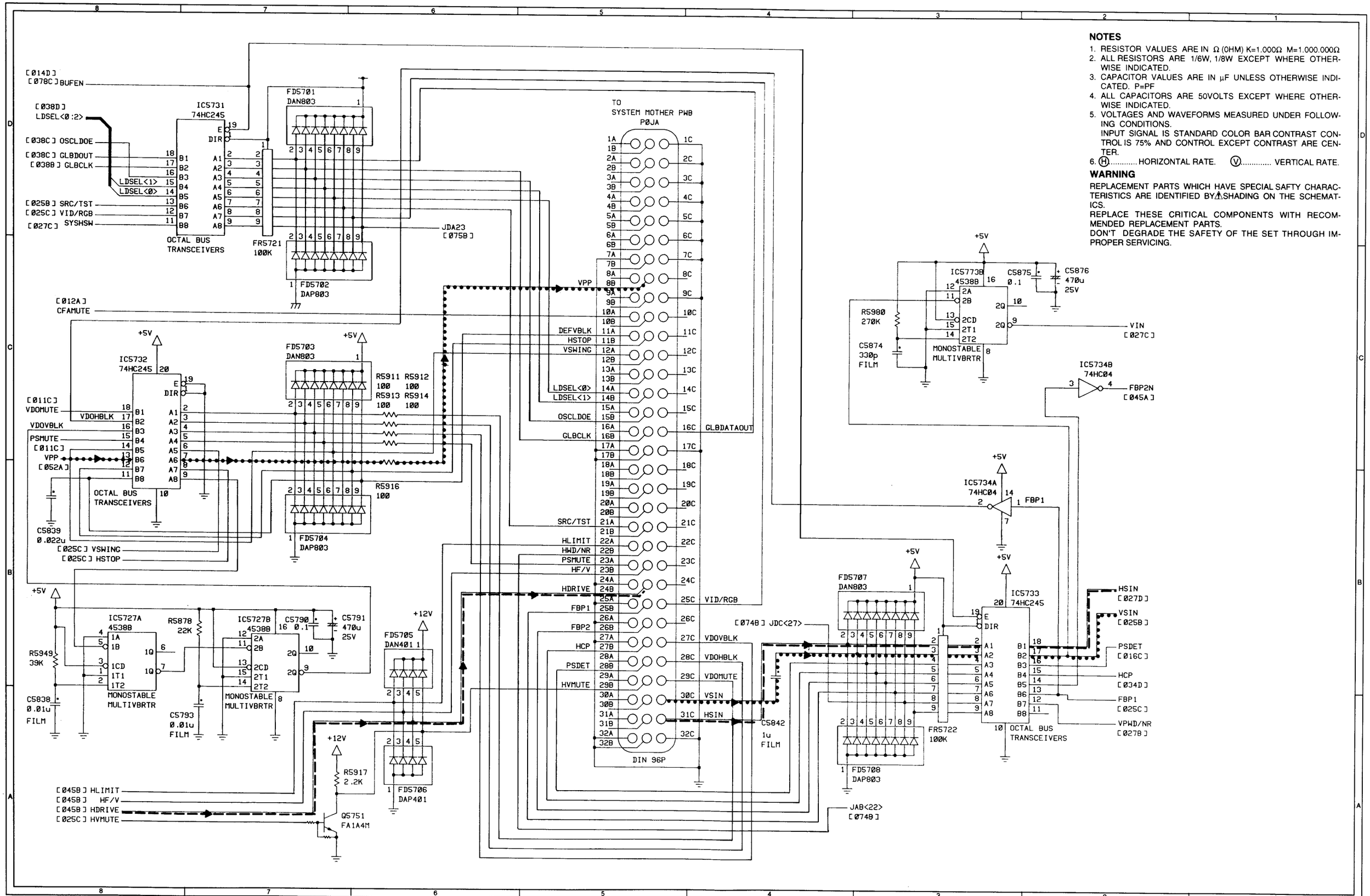

NOTES

1. RESISTOR VALUES ARE IN Ω (OHM) K=1.000Ω M=1.000.000Ω
2. ALL RESISTORS ARE 1/6W, 1/8W EXCEPT WHERE OTHERWISE INDICATED.
3. CAPACITOR VALUES ARE IN μF UNLESS OTHERWISE INDICATED. P=PF
4. ALL CAPACITORS ARE 50VOLTS EXCEPT WHERE OTHERWISE INDICATED.
5. VOLTAGES AND WAVEFORMS MEASURED UNDER FOLLOWING CONDITIONS.
   INPUT SIGNAL IS STANDARD COLOR BAR CONTRAST CONTROL IS 75% AND CONTROL EXCEPT CONTRAST ARE CENTER.
6. Ⓗ..... HORIZONTAL RATE. Ⓥ..... VERTICAL RATE.

WARNING

REPLACEMENT PARTS WHICH HAVE SPECIAL SAFTY CHARACTERISTICS ARE IDENTIFIED BY ⚠ SHADING ON THE SCHEMATICS.
REPLACE THESE CRITICAL COMPONENTS WITH RECOMMENDED REPLACEMENT PARTS.
DON'T DEGRADE THE SAFETY OF THE SET THROUGH IMPROPER SERVICING.

OSC PWB (PWC-4189) (7/7)

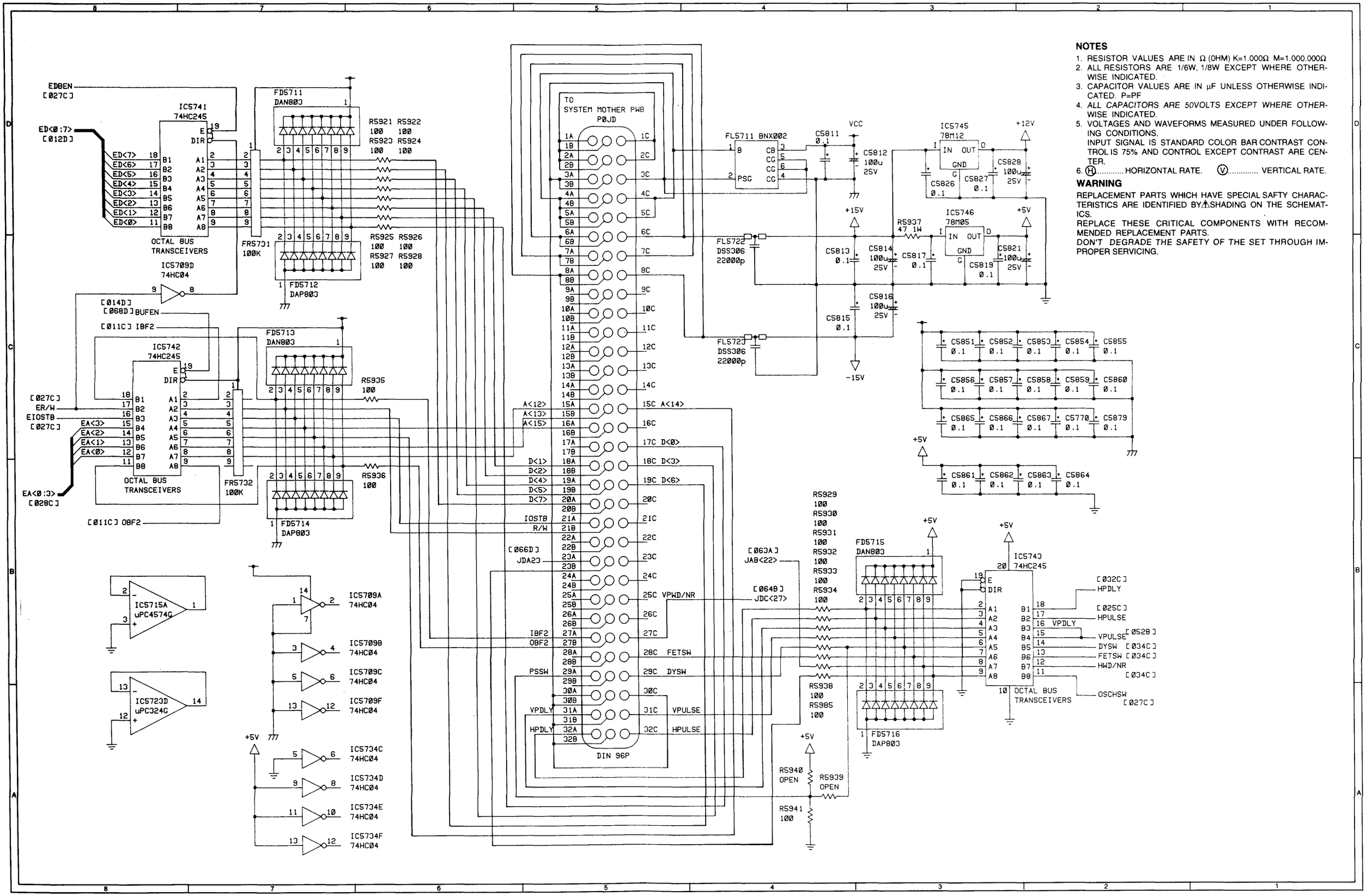

NOTES

1. RESISTOR VALUES ARE IN Ω (OHM) K=1.000Ω M=1.000.000Ω
2. ALL RESISTORS ARE 1/6W, 1/8W EXCEPT WHERE OTHERWISE INDICATED.
3. CAPACITOR VALUES ARE IN μF UNLESS OTHERWISE INDICATED. P=PF
4. *ALL CAPACITORS ARE 50VOLTS EXCEPT WHERE OTHERWISE INDICATED.*
5. VOLTAGES AND WAVEFORMS MEASURED UNDER FOLLOWING CONDITIONS.
   INPUT SIGNAL IS STANDARD COLOR BAR CONTRAST CONTROL IS 75% AND CONTROL EXCEPT CONTRAST ARE CENTER.
6. Ⓗ..... HORIZONTAL RATE. Ⓥ..... VERTICAL RATE.

WARNING

REPLACEMENT PARTS WHICH HAVE SPECIAL SAFTY CHARACTERISTICS ARE IDENTIFIED BY ⚠ SHADING ON THE SCHEMATICS.
REPLACE THESE CRITICAL COMPONENTS WITH RECOMMENDED REPLACEMENT PARTS.
DON'T DEGRADE THE SAFETY OF THE SET THROUGH IMPROPER SERVICING.

OSC PWB (PWC-4189)

PARTS SIDE

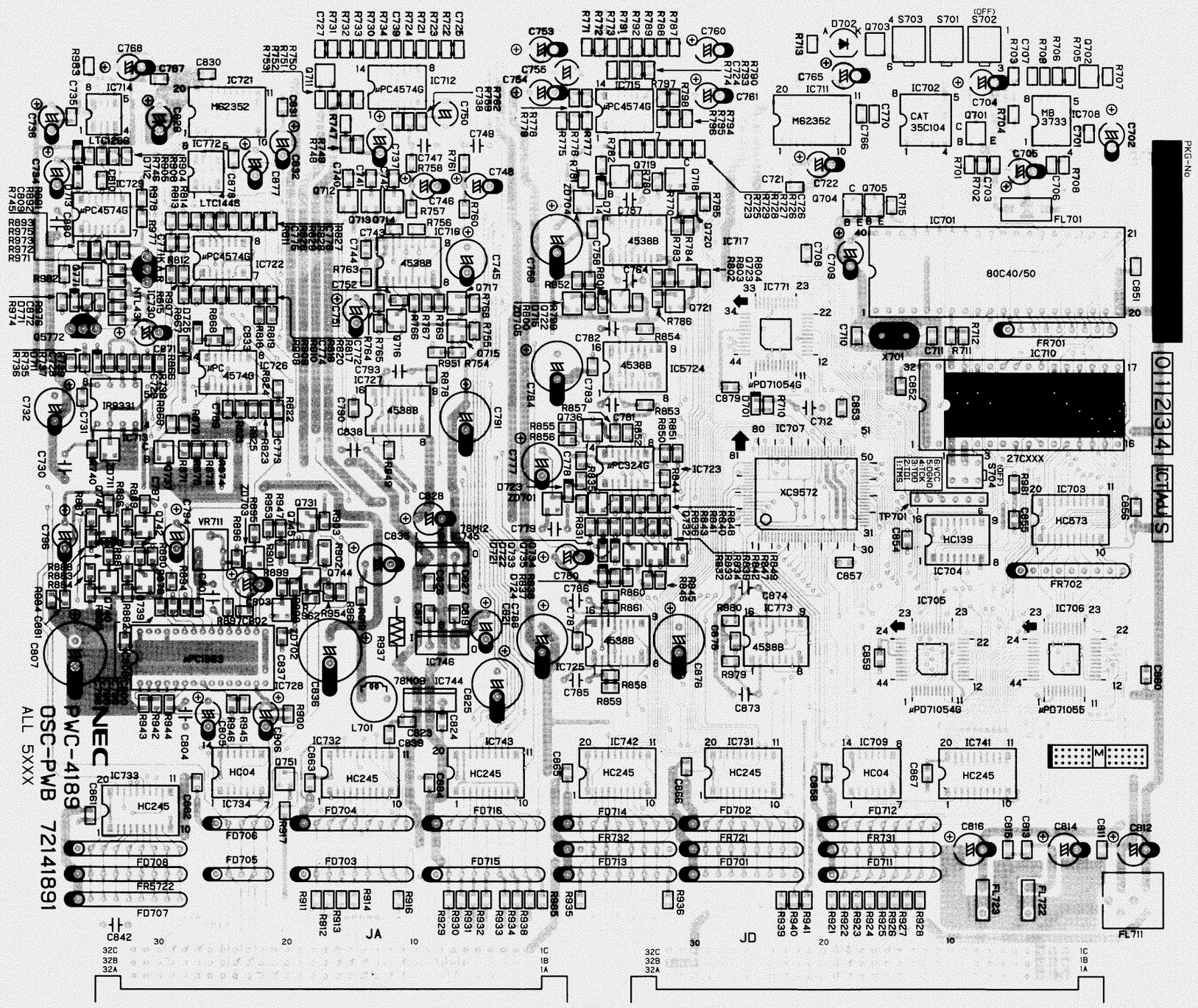

OSC PWB (PWC-4189)
SOLDER SIDE

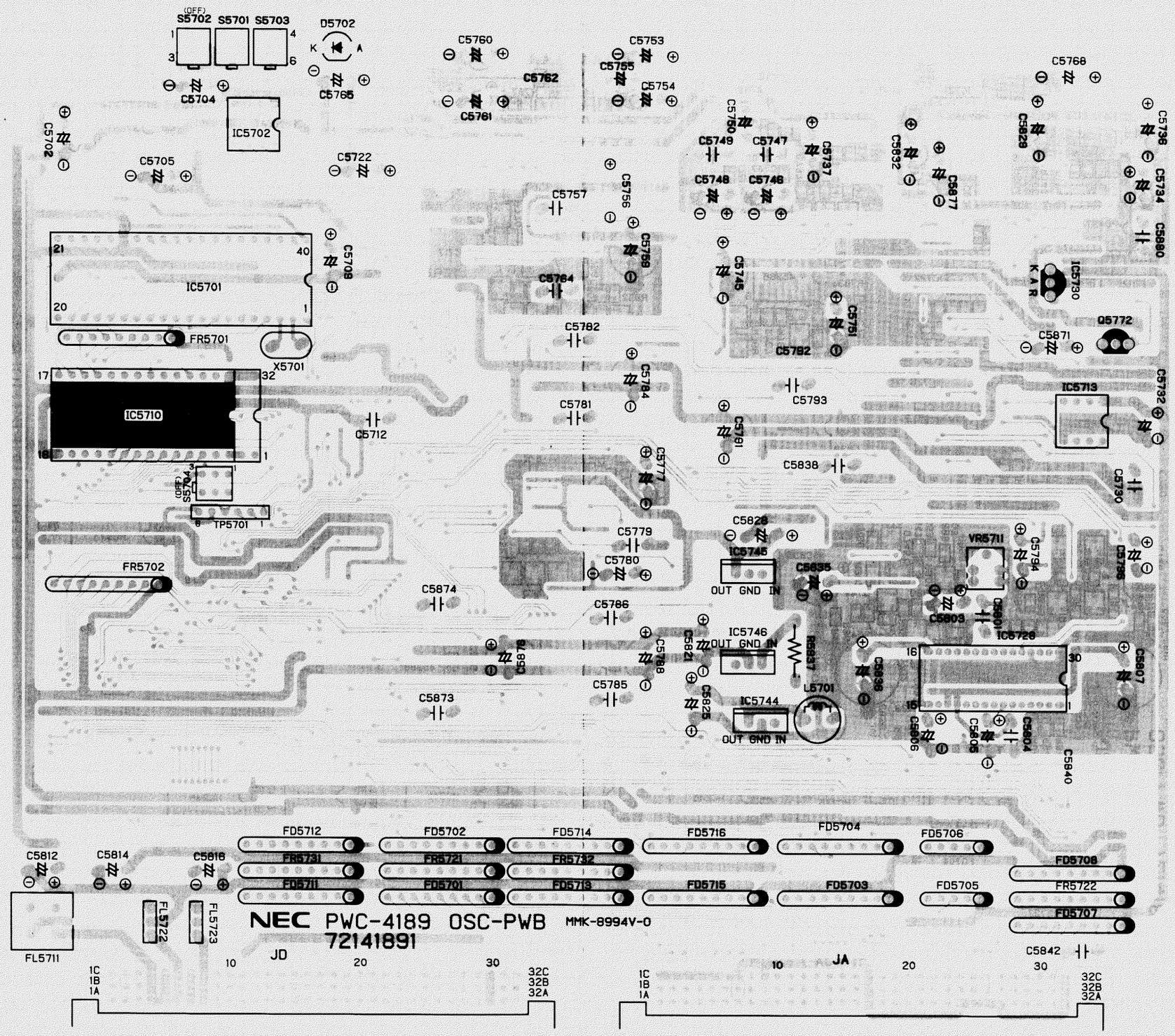

SYSTEM PWB (PWC-4188) (1/14)

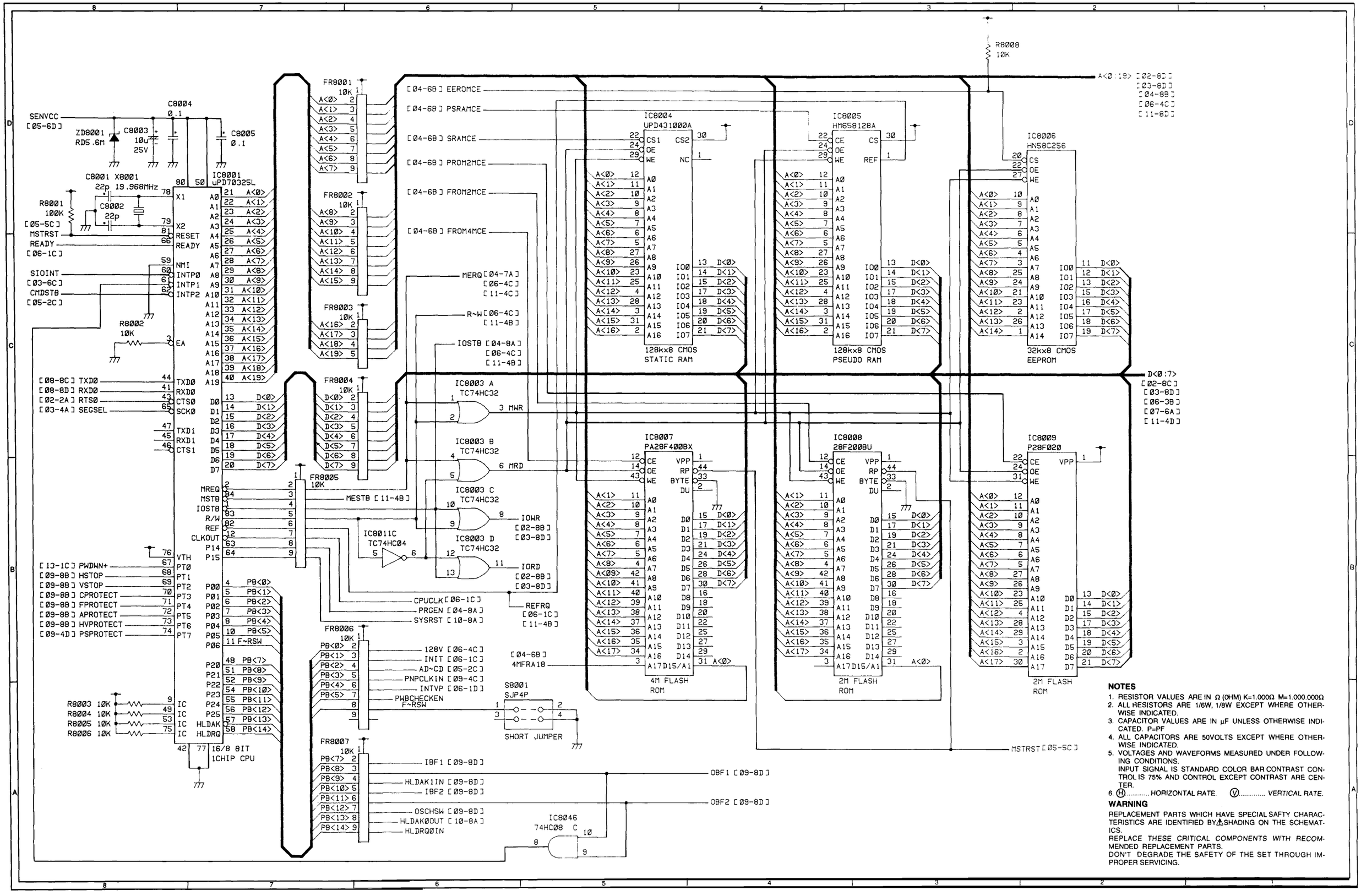

NOTES

1. RESISTOR VALUES ARE IN Ω (OHM) K=1.000Ω M=1.000.000Ω
2. ALL RESISTORS ARE 1/6W, 1/8W EXCEPT WHERE OTHERWISE INDICATED.
3. CAPACITOR VALUES ARE IN μF UNLESS OTHERWISE INDICATED. P=PF
4. ALL CAPACITORS ARE 50VOLTS EXCEPT WHERE OTHERWISE INDICATED.
5. VOLTAGES AND WAVEFORMS MEASURED UNDER FOLLOWING CONDITIONS.
   INPUT SIGNAL IS STANDARD COLOR BAR CONTRAST CONTROL IS 75% AND CONTROL EXCEPT CONTRAST ARE CENTER.
6. Ⓗ..... HORIZONTAL RATE. Ⓥ..... VERTICAL RATE.

WARNING

REPLACEMENT PARTS WHICH HAVE SPECIAL SAFTY CHARACTERISTICS ARE IDENTIFIED BY ⚠ SHADING ON THE SCHEMATICS.
REPLACE THESE CRITICAL COMPONENTS WITH RECOMMENDED REPLACEMENT PARTS.
DON'T DEGRADE THE SAFETY OF THE SET THROUGH IMPROPER SERVICING.

SYSTEM PWB (PWC-4188) (2/14)

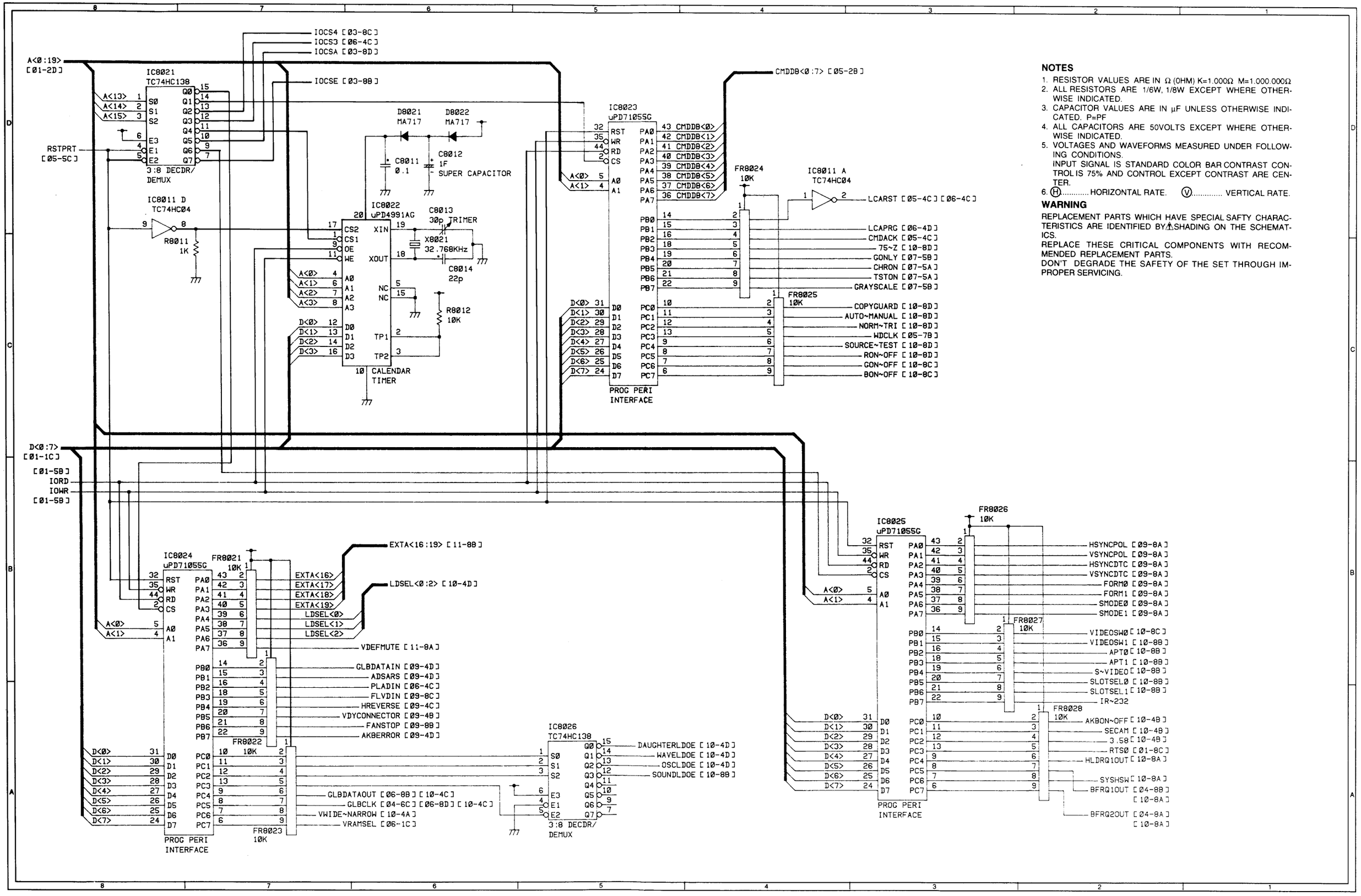

NOTES

1. RESISTOR VALUES ARE IN Ω (OHM) K=1.000Ω M=1.000.000Ω
2. ALL RESISTORS ARE 1/6W, 1/8W EXCEPT WHERE OTHERWISE INDICATED.
3. CAPACITOR VALUES ARE IN μF UNLESS OTHERWISE INDICATED. P=PF
4. ALL CAPACITORS ARE 50VOLTS EXCEPT WHERE OTHERWISE INDICATED.
5. VOLTAGES AND WAVEFORMS MEASURED UNDER FOLLOWING CONDITIONS.
   INPUT SIGNAL IS STANDARD COLOR BAR CONTRAST CONTROL IS 75% AND CONTROL EXCEPT CONTRAST ARE CENTER.
6. Ⓗ..... HORIZONTAL RATE. Ⓥ..... VERTICAL RATE.

WARNING

REPLACEMENT PARTS WHICH HAVE SPECIAL SAFTY CHARACTERISTICS ARE IDENTIFIED BY ⚠ SHADING ON THE SCHEMATICS.
REPLACE THESE CRITICAL COMPONENTS WITH RECOMMENDED REPLACEMENT PARTS.
DON'T DEGRADE THE SAFETY OF THE SET THROUGH IMPROPER SERVICING.

SYSTEM PWB (PWC-4188) (3/14)

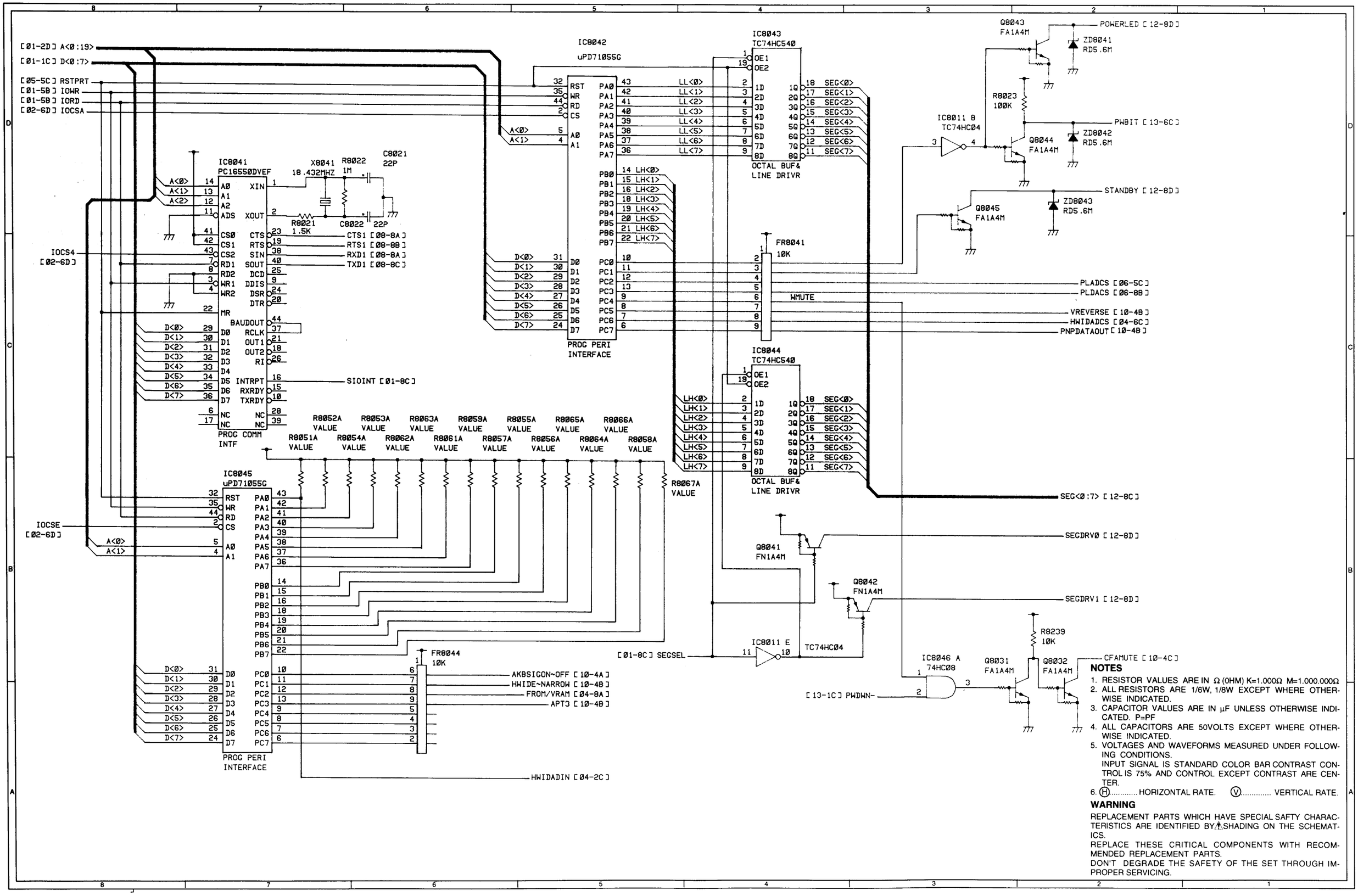

NOTES

1. RESISTOR VALUES ARE IN Ω (OHM) K=1.000Ω M=1.000.000Ω
2. ALL RESISTORS ARE 1/6W, 1/8W EXCEPT WHERE OTHERWISE INDICATED.
3. CAPACITOR VALUES ARE IN μF UNLESS OTHERWISE INDICATED. P=PF
4. ALL CAPACITORS ARE 50VOLTS EXCEPT WHERE OTHERWISE INDICATED.
5. VOLTAGES AND WAVEFORMS MEASURED UNDER FOLLOWING CONDITIONS.
   INPUT SIGNAL IS STANDARD COLOR BAR CONTRAST CONTROL IS 75% AND CONTROL EXCEPT CONTRAST ARE CENTER.
6. Ⓗ..... HORIZONTAL RATE. Ⓥ..... VERTICAL RATE.

WARNING

REPLACEMENT PARTS WHICH HAVE SPECIAL SAFTY CHARACTERISTICS ARE IDENTIFIED BY ⚠ SHADING ON THE SCHEMATICS.
REPLACE THESE CRITICAL COMPONENTS WITH RECOMMENDED REPLACEMENT PARTS.
DON'T DEGRADE THE SAFETY OF THE SET THROUGH IMPROPER SERVICING.

SYSTEM PWB (PWC-4188) (4/14)

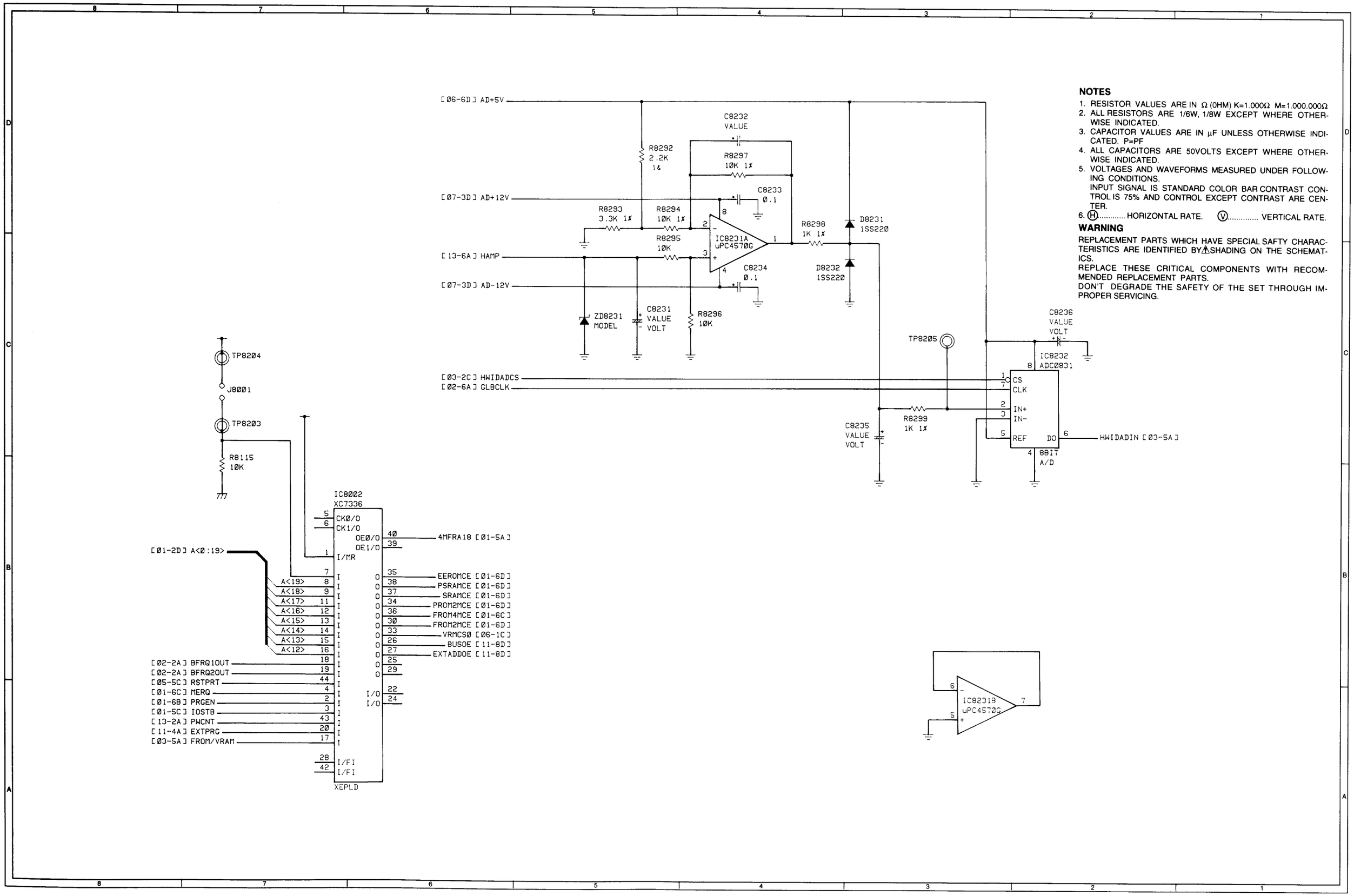

NOTES

1. RESISTOR VALUES ARE IN Ω (OHM) K=1.000Ω M=1.000.000Ω
2. ALL RESISTORS ARE 1/6W, 1/8W EXCEPT WHERE OTHERWISE INDICATED.
3. CAPACITOR VALUES ARE IN μF UNLESS OTHERWISE INDICATED. P=PF
4. ALL CAPACITORS ARE 50VOLTS EXCEPT WHERE OTHERWISE INDICATED.
5. VOLTAGES AND WAVEFORMS MEASURED UNDER FOLLOWING CONDITIONS.
   INPUT SIGNAL IS STANDARD COLOR BAR CONTRAST CONTROL IS 75% AND CONTROL EXCEPT CONTRAST ARE CENTER.
6. (H)..... HORIZONTAL RATE. (V)..... VERTICAL RATE.

WARNING

REPLACEMENT PARTS WHICH HAVE SPECIAL SAFTY CHARACTERISTICS ARE IDENTIFIED BY ⚠ SHADING ON THE SCHEMATICS.
REPLACE THESE CRITICAL COMPONENTS WITH RECOMMENDED REPLACEMENT PARTS.
DON'T DEGRADE THE SAFETY OF THE SET THROUGH IMPROPER SERVICING.

SYSTEM PWB (PWC-4188) (5/14)

NOTES

1. RESISTOR VALUES ARE IN Ω (OHM) K=1,000Ω M=1,000,000Ω
2. ALL RESISTORS ARE 1/6W, 1/8W EXCEPT WHERE OTHERWISE INDICATED.
3. CAPACITOR VALUES ARE IN μF UNLESS OTHERWISE INDICATED. P=PF
4. ALL CAPACITORS ARE 50VOLTS EXCEPT WHERE OTHERWISE INDICATED.
5. VOLTAGES AND WAVEFORMS MEASURED UNDER FOLLOWING CONDITIONS.
   INPUT SIGNAL IS STANDARD COLOR BAR CONTRAST CONTROL IS 75% AND CONTROL EXCEPT CONTRAST ARE CENTER.
6. (H)..... HORIZONTAL RATE. (V)..... VERTICAL RATE.

WARNING

REPLACEMENT PARTS WHICH HAVE SPECIAL SAFTY CHARACTERISTICS ARE IDENTIFIED BY ⚠ SHADING ON THE SCHEMATICS.
REPLACE THESE CRITICAL COMPONENTS WITH RECOMMENDED REPLACEMENT PARTS.
DON'T DEGRADE THE SAFETY OF THE SET THROUGH IMPROPER SERVICING.

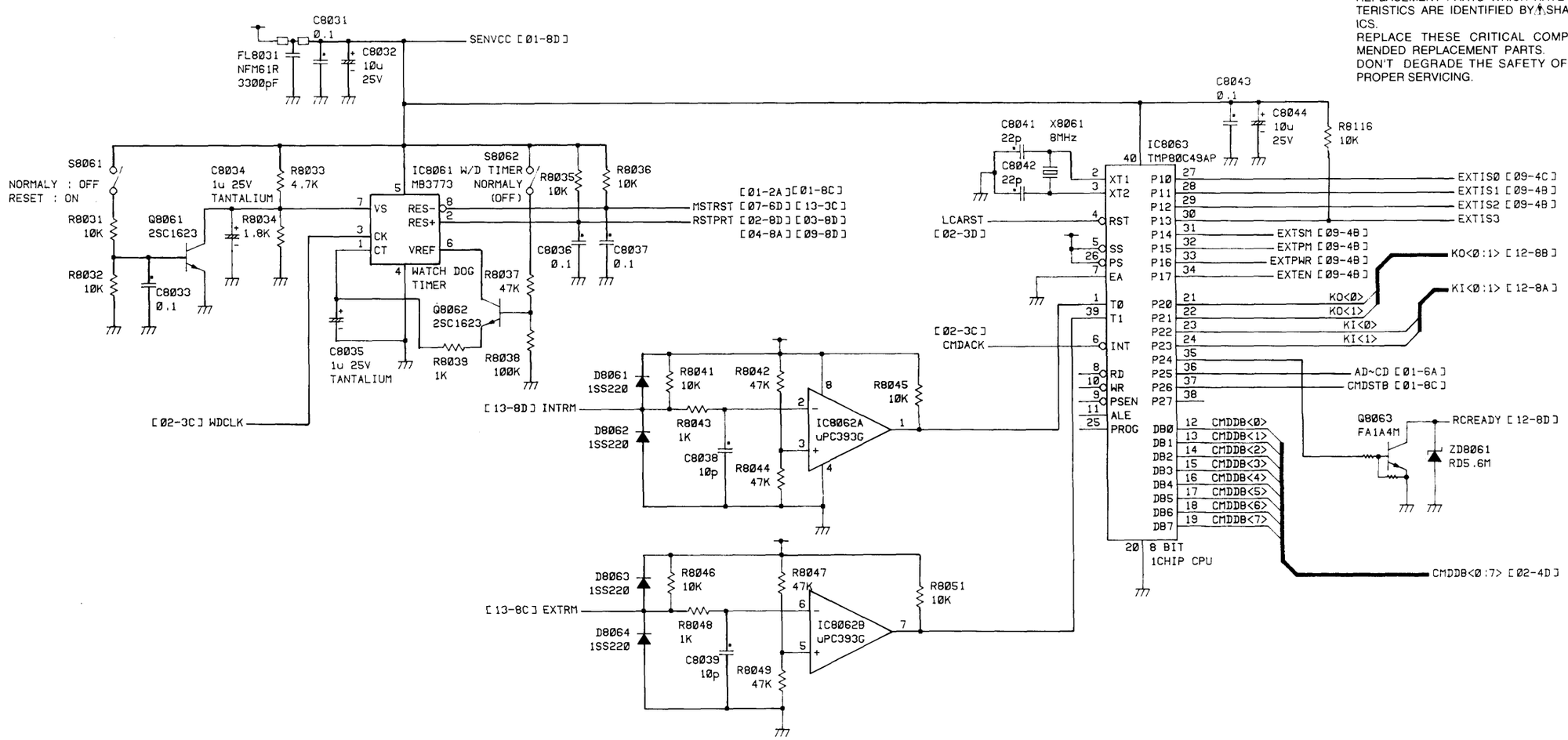

SYSTEM PWB (PWC-4188) (6/14)

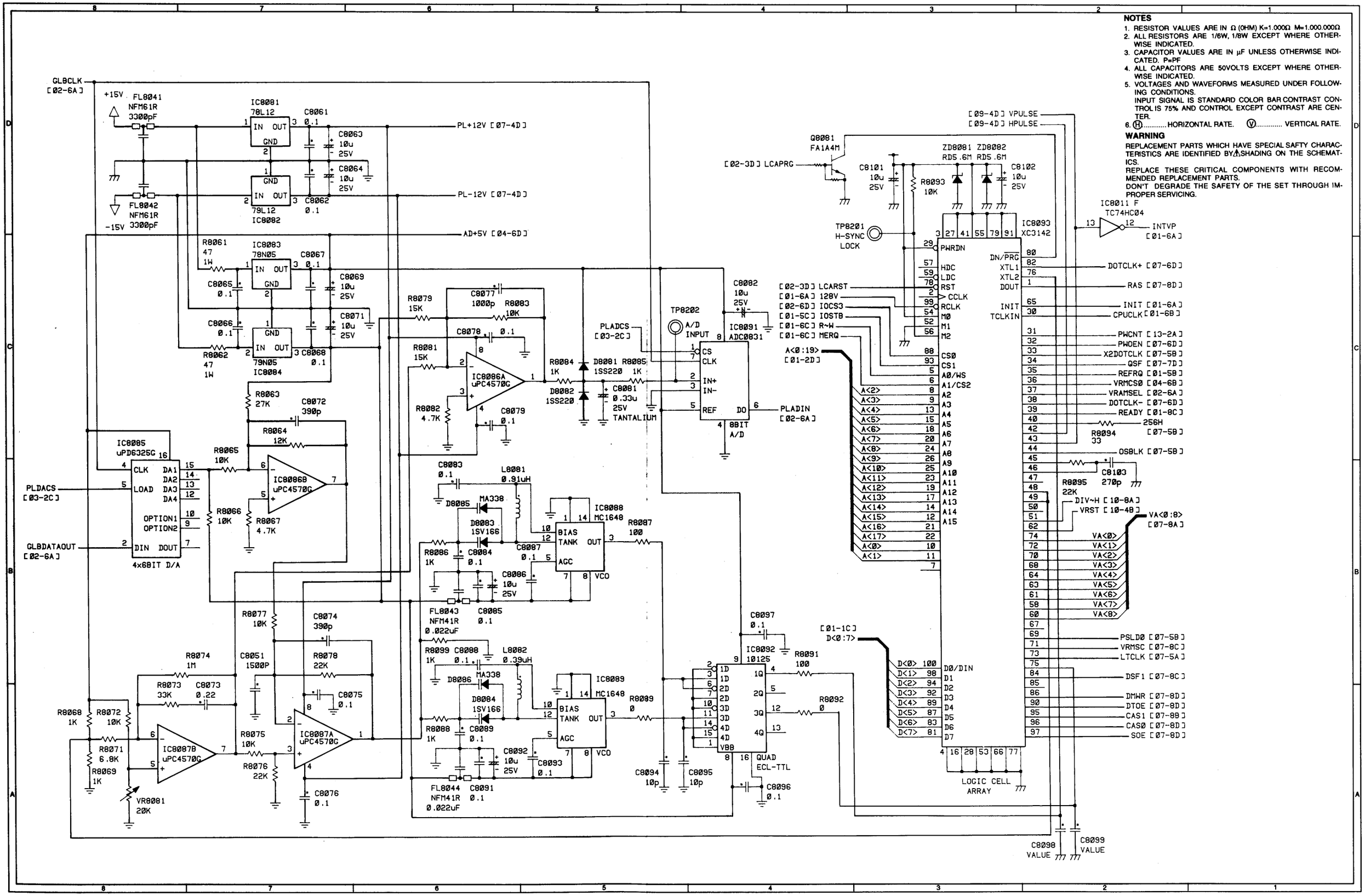

SYSTEM PWB (PWC-4188) (7/14)

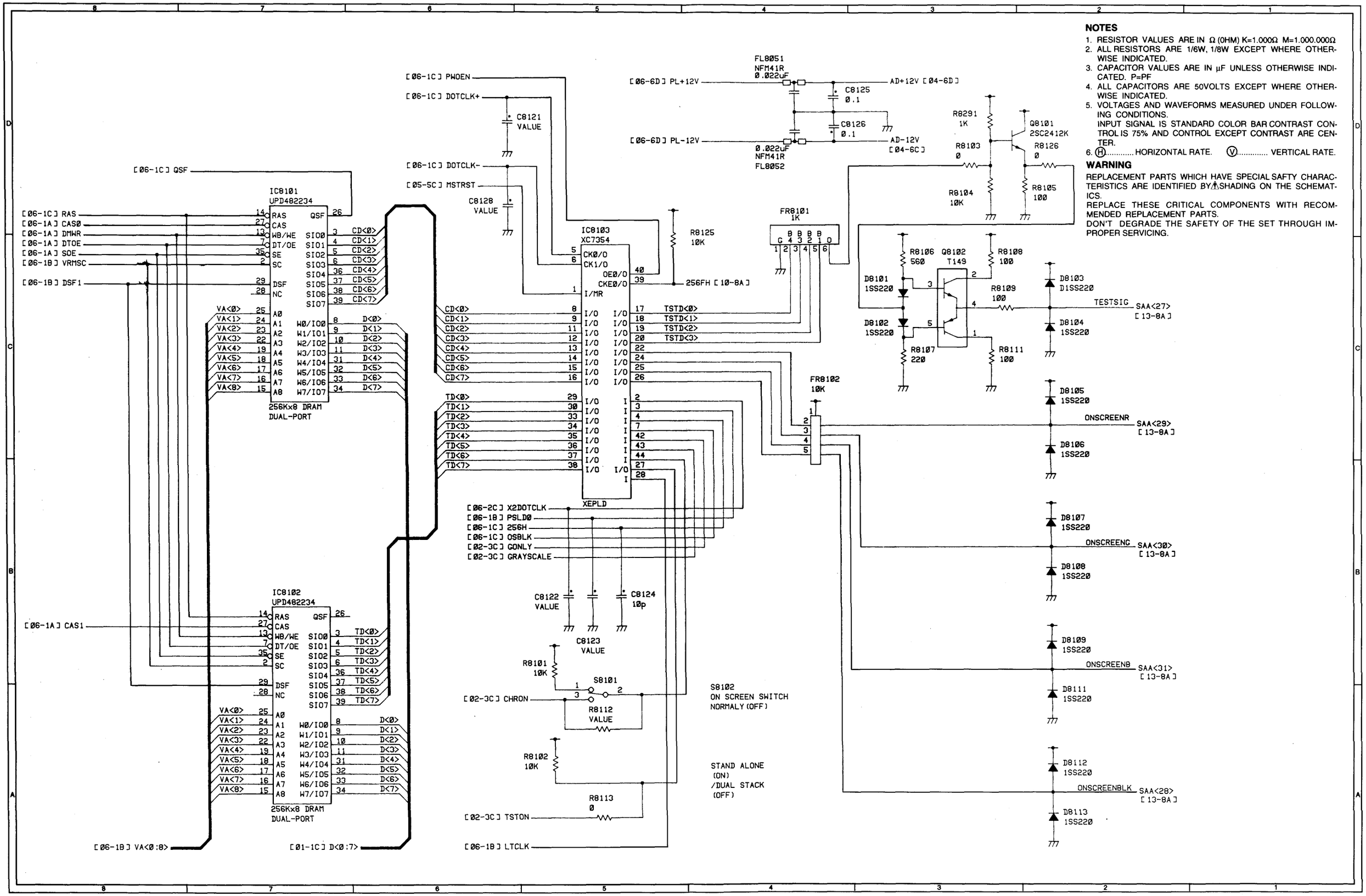

NOTES

1. RESISTOR VALUES ARE IN Ω (OHM) K=1.000Ω M=1.000.000Ω
2. ALL RESISTORS ARE 1/6W, 1/8W EXCEPT WHERE OTHERWISE INDICATED.
3. CAPACITOR VALUES ARE IN μF UNLESS OTHERWISE INDICATED. P=PF
4. ALL CAPACITORS ARE 50VOLTS EXCEPT WHERE OTHERWISE INDICATED.
5. VOLTAGES AND WAVEFORMS MEASURED UNDER FOLLOWING CONDITIONS.
   INPUT SIGNAL IS STANDARD COLOR BAR CONTRAST CONTROL IS 75% AND CONTROL EXCEPT CONTRAST ARE CENTER.
6. Ⓗ..... HORIZONTAL RATE. Ⓥ..... VERTICAL RATE.

WARNING

REPLACEMENT PARTS WHICH HAVE SPECIAL SAFTY CHARACTERISTICS ARE IDENTIFIED BY ⚠ SHADING ON THE SCHEMATICS.
REPLACE THESE CRITICAL COMPONENTS WITH RECOMMENDED REPLACEMENT PARTS.
DON'T DEGRADE THE SAFETY OF THE SET THROUGH IMPROPER SERVICING.

SYSTEM PWB (PWC-4188) (8/14)

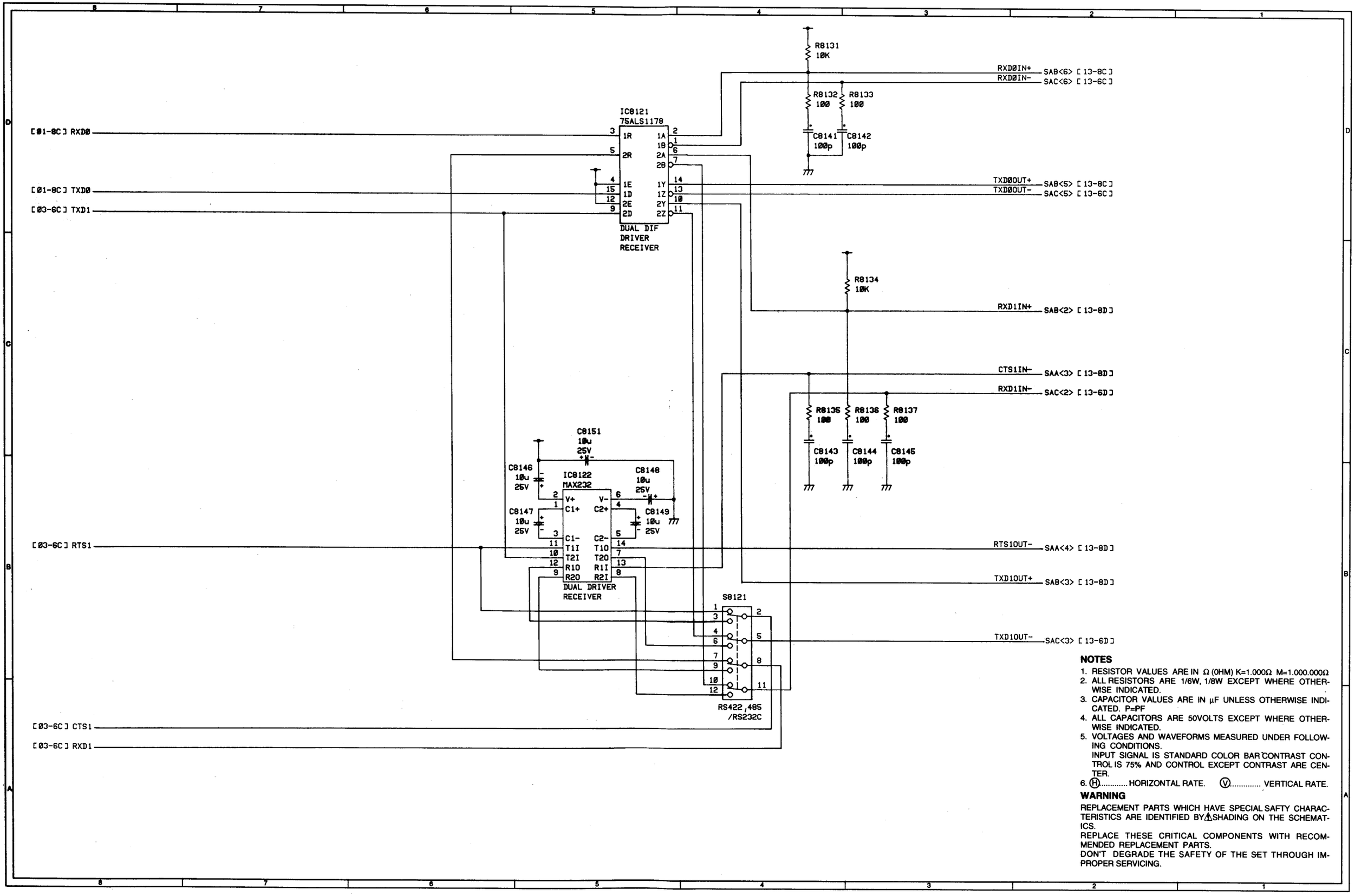

NOTES

1. RESISTOR VALUES ARE IN Ω (OHM) K=1.000Ω M=1.000.000Ω
2. ALL RESISTORS ARE 1/6W, 1/8W EXCEPT WHERE OTHERWISE INDICATED.
3. CAPACITOR VALUES ARE IN μF UNLESS OTHERWISE INDICATED. P=PF
4. ALL CAPACITORS ARE 50VOLTS EXCEPT WHERE OTHERWISE INDICATED.
5. VOLTAGES AND WAVEFORMS MEASURED UNDER FOLLOWING CONDITIONS.
   INPUT SIGNAL IS STANDARD COLOR BAR CONTRAST CONTROL IS 75% AND CONTROL EXCEPT CONTRAST ARE CENTER.
6. Ⓗ..... HORIZONTAL RATE. Ⓥ..... VERTICAL RATE.

WARNING

REPLACEMENT PARTS WHICH HAVE SPECIAL SAFTY CHARACTERISTICS ARE IDENTIFIED BY ⚠ SHADING ON THE SCHEMATICS.
REPLACE THESE CRITICAL COMPONENTS WITH RECOMMENDED REPLACEMENT PARTS.
DON'T DEGRADE THE SAFETY OF THE SET THROUGH IMPROPER SERVICING.

SYSTEM PWB (PWC-4188) (9/14)

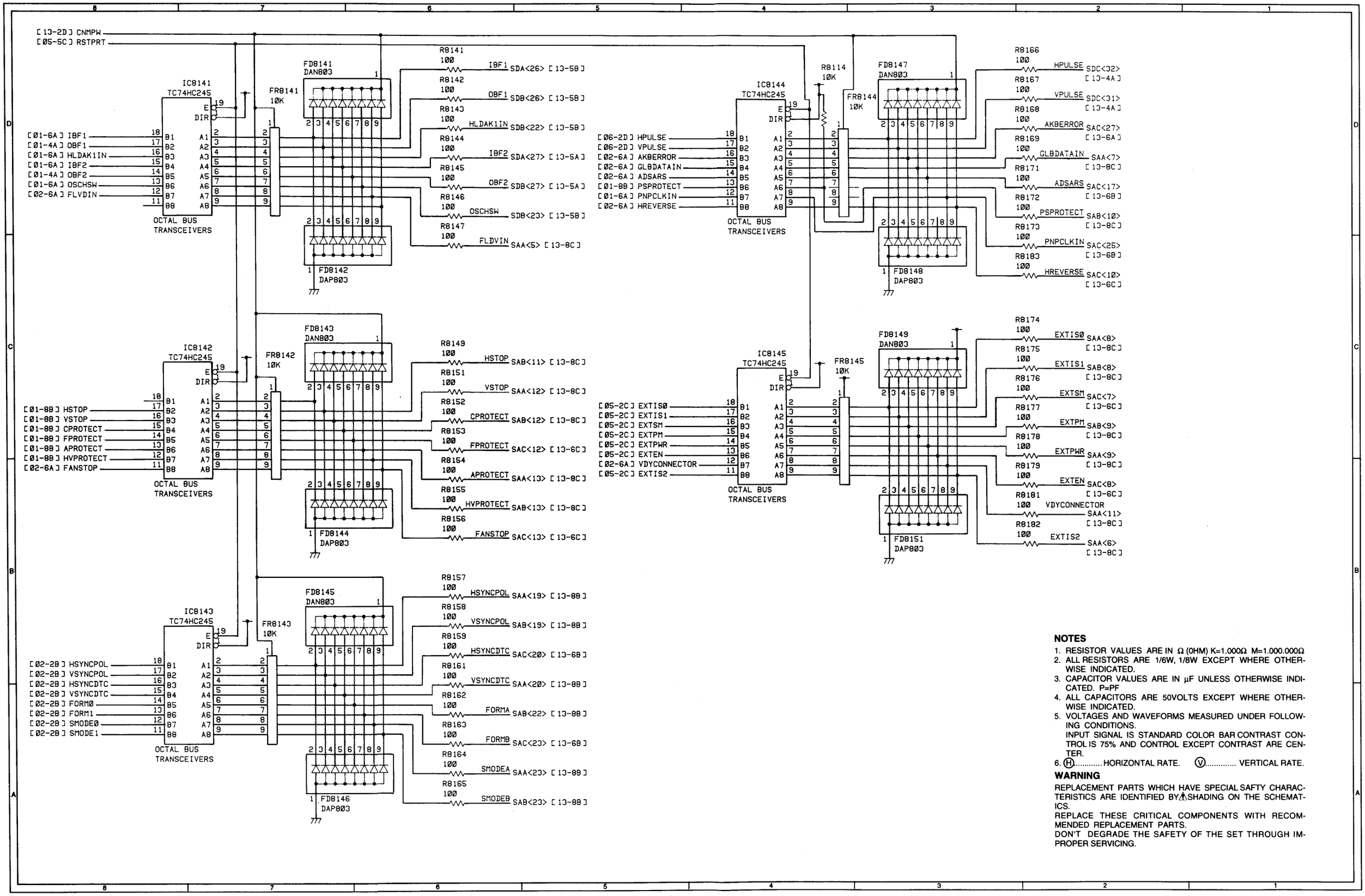

NOTES

1. RESISTOR VALUES ARE IN Ω (OHM) K=1.000Ω M=1.000.000Ω
2. ALL RESISTORS ARE 1/6W, 1/8W EXCEPT WHERE OTHERWISE INDICATED.
3. CAPACITOR VALUES ARE IN μF UNLESS OTHERWISE INDICATED. P=PF
4. ALL CAPACITORS ARE 50VOLTS EXCEPT WHERE OTHERWISE INDICATED.
5. VOLTAGES AND WAVEFORMS MEASURED UNDER FOLLOWING CONDITIONS.
   INPUT SIGNAL IS STANDARD COLOR BAR CONTRAST CONTROL IS 75% AND CONTROL EXCEPT CONTRAST ARE CENTER.
6. Ⓗ..... HORIZONTAL RATE. Ⓥ..... VERTICAL RATE.

WARNING

REPLACEMENT PARTS WHICH HAVE SPECIAL SAFTY CHARACTERISTICS ARE IDENTIFIED BY ⚠ SHADING ON THE SCHEMATICS.
REPLACE THESE CRITICAL COMPONENTS WITH RECOMMENDED REPLACEMENT PARTS.
DON'T DEGRADE THE SAFETY OF THE SET THROUGH IMPROPER SERVICING.

SYSTEM PWB (PWC-4188) (10/14)

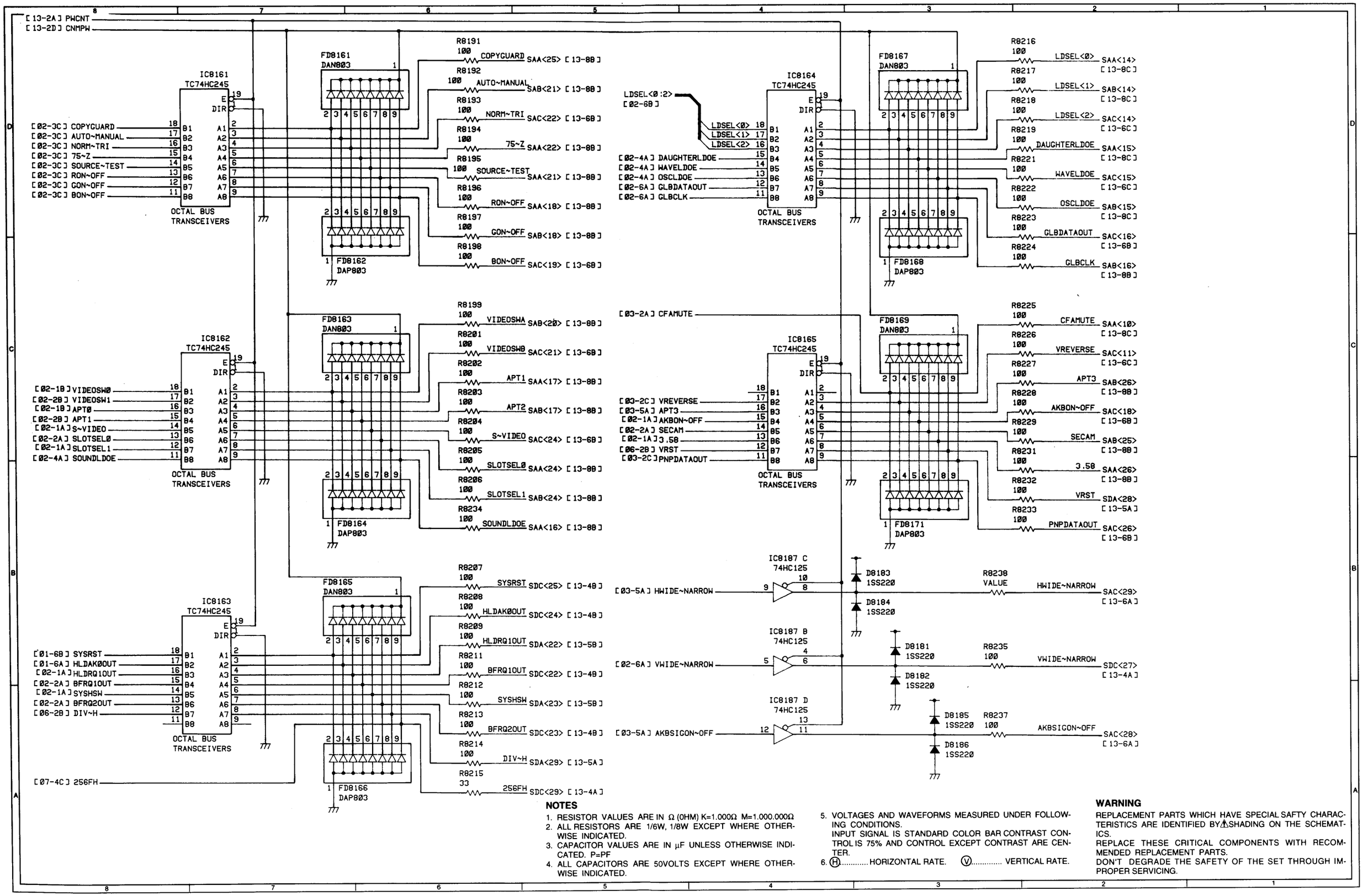

NOTES

1. RESISTOR VALUES ARE IN Ω (OHM) K=1.000Ω M=1.000.000Ω
2. ALL RESISTORS ARE 1/6W, 1/8W EXCEPT WHERE OTHERWISE INDICATED.
3. CAPACITOR VALUES ARE IN μF UNLESS OTHERWISE INDICATED. P=PF
4. ALL CAPACITORS ARE 50VOLTS EXCEPT WHERE OTHERWISE INDICATED.
5. VOLTAGES AND WAVEFORMS MEASURED UNDER FOLLOWING CONDITIONS.
   INPUT SIGNAL IS STANDARD COLOR BAR CONTRAST CONTROL IS 75% AND CONTROL EXCEPT CONTRAST ARE CENTER.
6. (H)..... HORIZONTAL RATE. (V)..... VERTICAL RATE.

WARNING

REPLACEMENT PARTS WHICH HAVE SPECIAL SAFTY CHARACTERISTICS ARE IDENTIFIED BY ⚠ SHADING ON THE SCHEMATICS.
REPLACE THESE CRITICAL COMPONENTS WITH RECOMMENDED REPLACEMENT PARTS.
DON'T DEGRADE THE SAFETY OF THE SET THROUGH IMPROPER SERVICING.

SYSTEM PWB (PWC-4188) (11/14)

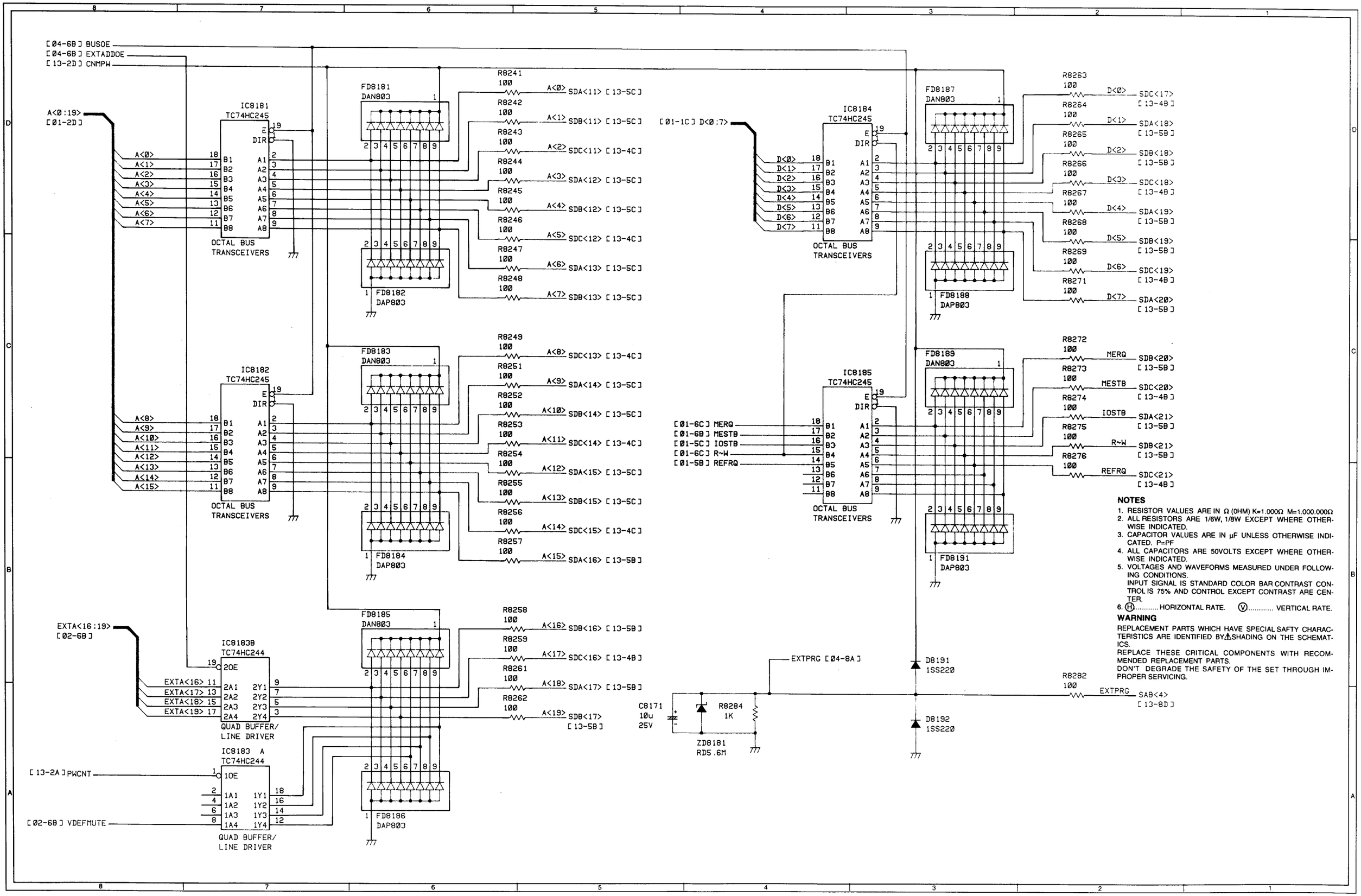

NOTES

1. RESISTOR VALUES ARE IN Ω (OHM) K=1.000Ω M=1.000.000Ω
2. ALL RESISTORS ARE 1/6W, 1/8W EXCEPT WHERE OTHERWISE INDICATED.
3. CAPACITOR VALUES ARE IN μF UNLESS OTHERWISE INDICATED. P=PF
4. ALL CAPACITORS ARE 50VOLTS EXCEPT WHERE OTHERWISE INDICATED.
5. VOLTAGES AND WAVEFORMS MEASURED UNDER FOLLOWING CONDITIONS.
   INPUT SIGNAL IS STANDARD COLOR BAR CONTRAST CONTROL IS 75% AND CONTROL EXCEPT CONTRAST ARE CENTER.
6. (H)..... HORIZONTAL RATE. (V)..... VERTICAL RATE.

WARNING

REPLACEMENT PARTS WHICH HAVE SPECIAL SAFTY CHARACTERISTICS ARE IDENTIFIED BY ⚠ SHADING ON THE SCHEMATICS.
REPLACE THESE CRITICAL COMPONENTS WITH RECOMMENDED REPLACEMENT PARTS.
DON'T DEGRADE THE SAFETY OF THE SET THROUGH IMPROPER SERVICING.

SYSTEM PWB (PWC-4188) (12/14)

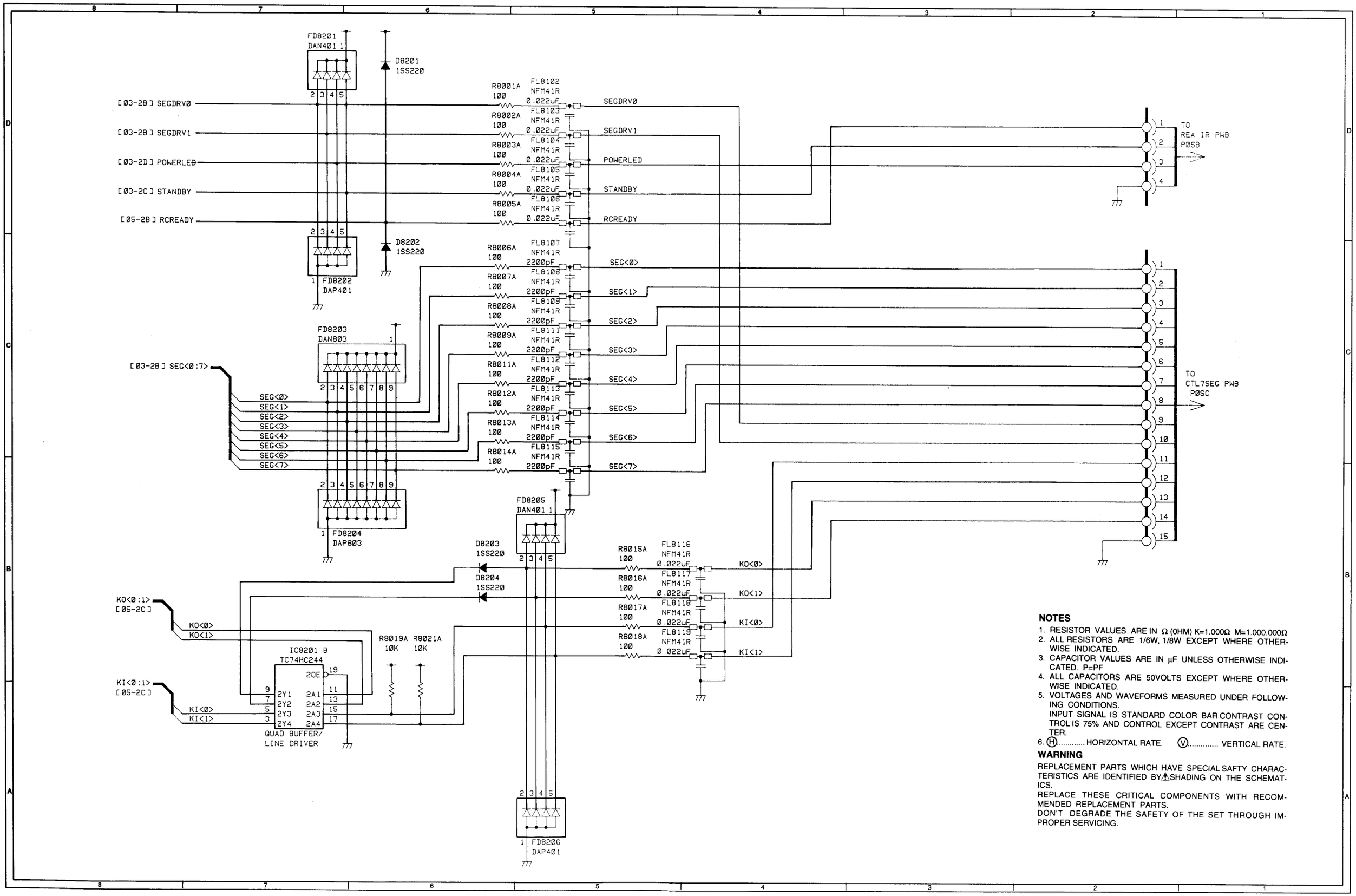

NOTES

1. RESISTOR VALUES ARE IN Ω (OHM) K=1.000Ω M=1.000.000Ω
2. ALL RESISTORS ARE 1/6W, 1/8W EXCEPT WHERE OTHERWISE INDICATED.
3. CAPACITOR VALUES ARE IN μF UNLESS OTHERWISE INDICATED. P=PF
4. ALL CAPACITORS ARE 50VOLTS EXCEPT WHERE OTHERWISE INDICATED.
5. VOLTAGES AND WAVEFORMS MEASURED UNDER FOLLOWING CONDITIONS.
   INPUT SIGNAL IS STANDARD COLOR BAR CONTRAST CONTROL IS 75% AND CONTROL EXCEPT CONTRAST ARE CENTER.
6. Ⓗ..... HORIZONTAL RATE. Ⓥ..... VERTICAL RATE.

WARNING

REPLACEMENT PARTS WHICH HAVE SPECIAL SAFTY CHARACTERISTICS ARE IDENTIFIED BY ⚠ SHADING ON THE SCHEMATICS.
REPLACE THESE CRITICAL COMPONENTS WITH RECOMMENDED REPLACEMENT PARTS.
DON'T DEGRADE THE SAFETY OF THE SET THROUGH IMPROPER SERVICING.

SYSTEM PWB (PWC-4188) (13/14)

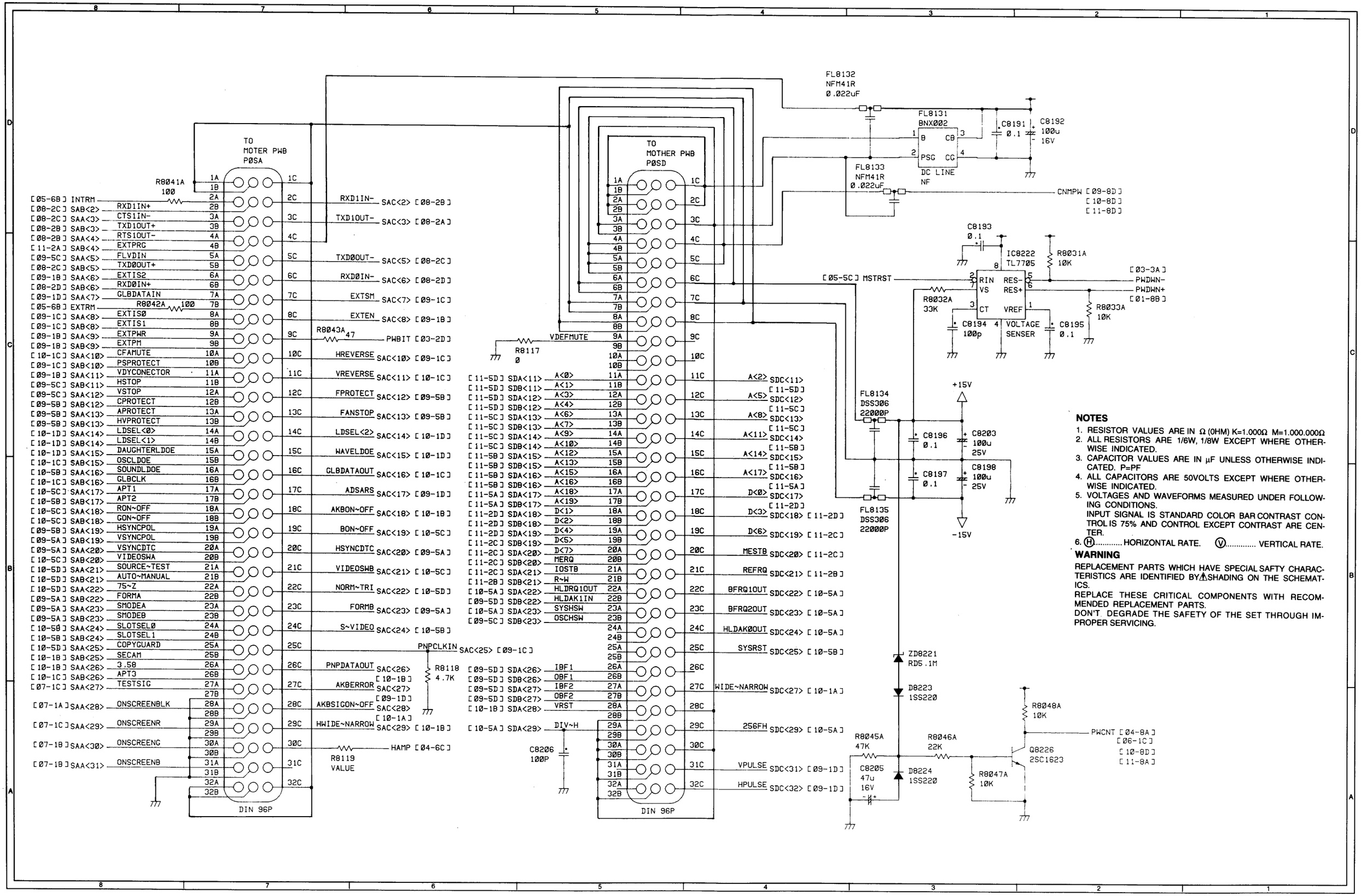

NOTES

1. RESISTOR VALUES ARE IN Ω (OHM) K=1.000Ω M=1.000.000Ω
2. ALL RESISTORS ARE 1/6W, 1/8W EXCEPT WHERE OTHERWISE INDICATED.
3. CAPACITOR VALUES ARE IN μF UNLESS OTHERWISE INDICATED. P=PF
4. ALL CAPACITORS ARE 50VOLTS EXCEPT WHERE OTHERWISE INDICATED.
5. VOLTAGES AND WAVEFORMS MEASURED UNDER FOLLOWING CONDITIONS.
   INPUT SIGNAL IS STANDARD COLOR BAR CONTRAST CONTROL IS 75% AND CONTROL EXCEPT CONTRAST ARE CENTER.
6. Ⓗ..... HORIZONTAL RATE. Ⓥ..... VERTICAL RATE.

WARNING

REPLACEMENT PARTS WHICH HAVE SPECIAL SAFTY CHARACTERISTICS ARE IDENTIFIED BY⚠SHADING ON THE SCHEMATICS.
REPLACE THESE CRITICAL COMPONENTS WITH RECOMMENDED REPLACEMENT PARTS.
DON'T DEGRADE THE SAFETY OF THE SET THROUGH IMPROPER SERVICING.

SYSTEM PWB (PWC-4188) (14/14)

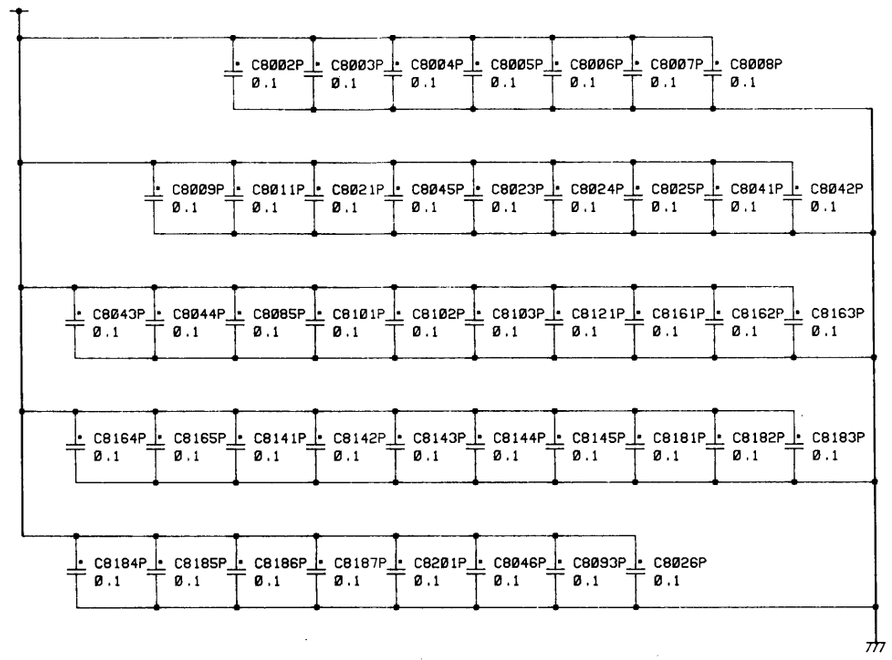

NOTES

1. RESISTOR VALUES ARE IN Ω (OHM) K=1.000Ω M=1.000.000Ω
2. ALL RESISTORS ARE 1/6W, 1/8W EXCEPT WHERE OTHERWISE INDICATED.
3. CAPACITOR VALUES ARE IN μF UNLESS OTHERWISE INDICATED. P=PF
4. ALL CAPACITORS ARE 50VOLTS EXCEPT WHERE OTHERWISE INDICATED.
5. VOLTAGES AND WAVEFORMS MEASURED UNDER FOLLOWING CONDITIONS.
   INPUT SIGNAL IS STANDARD COLOR BAR CONTRAST CONTROL IS 75% AND CONTROL EXCEPT CONTRAST ARE CENTER.
6. Ⓗ..... HORIZONTAL RATE. Ⓥ..... VERTICAL RATE.

WARNING

REPLACEMENT PARTS WHICH HAVE SPECIAL SAFTY CHARACTERISTICS ARE IDENTIFIED BY ⚠ SHADING ON THE SCHEMATICS.
REPLACE THESE CRITICAL COMPONENTS WITH RECOMMENDED REPLACEMENT PARTS.
DON'T DEGRADE THE SAFETY OF THE SET THROUGH IMPROPER SERVICING.

SYSTEM PWB (PWC-4188)
PARTS SIDE

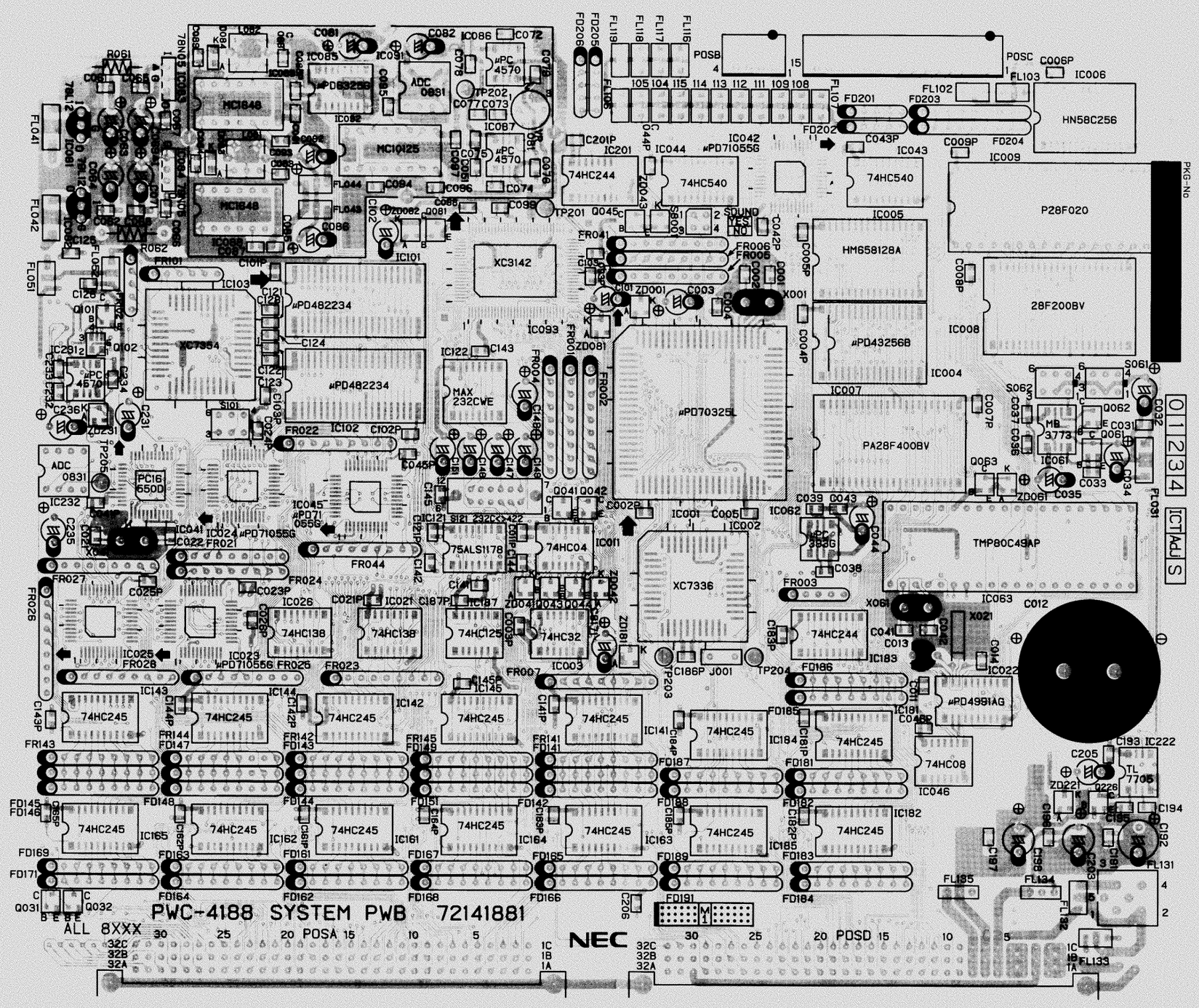

SYSTEM PWB (PWC-4188)
SOLDER SIDE

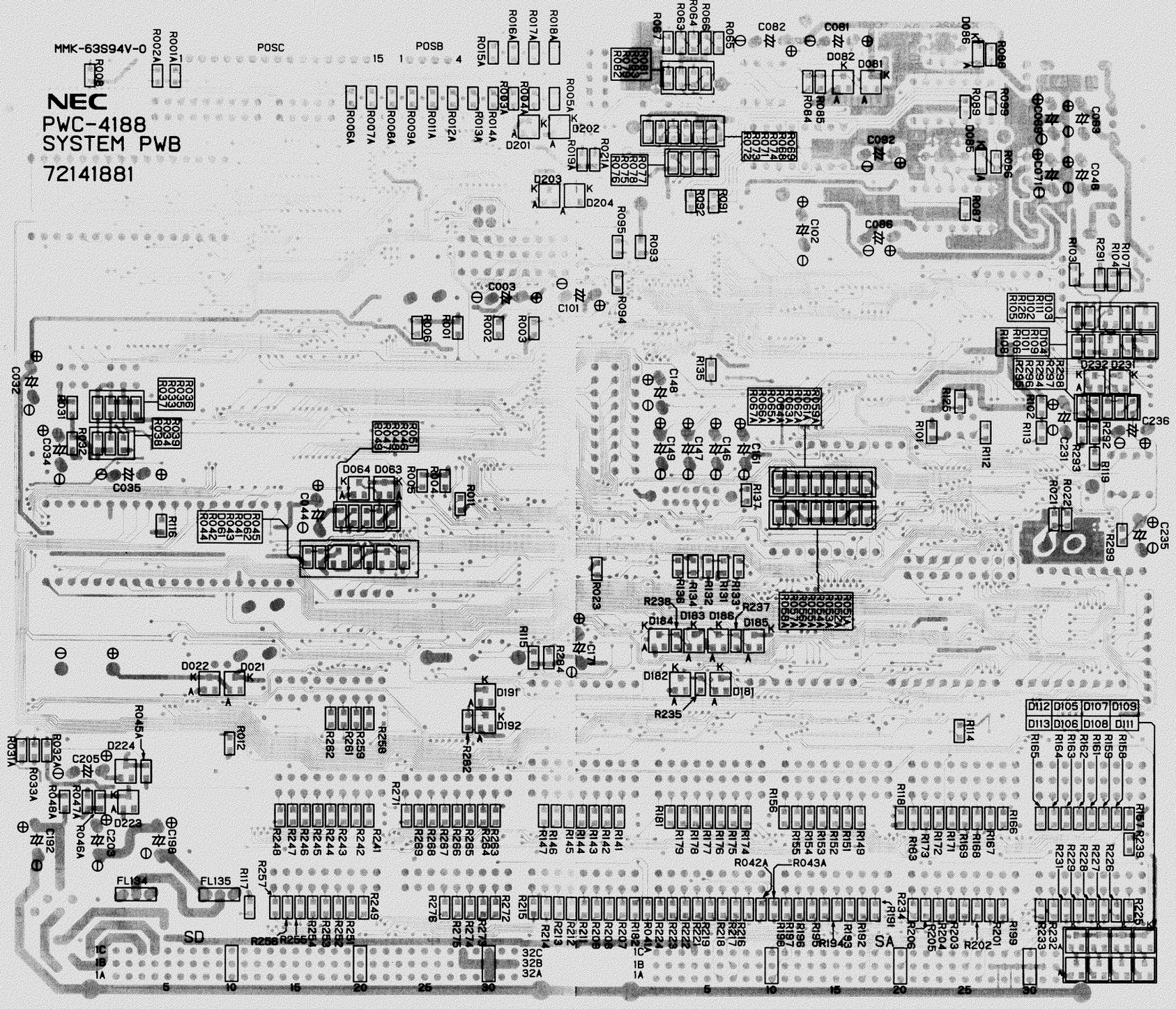

F-MOTHER PWB (PWC-4073C)

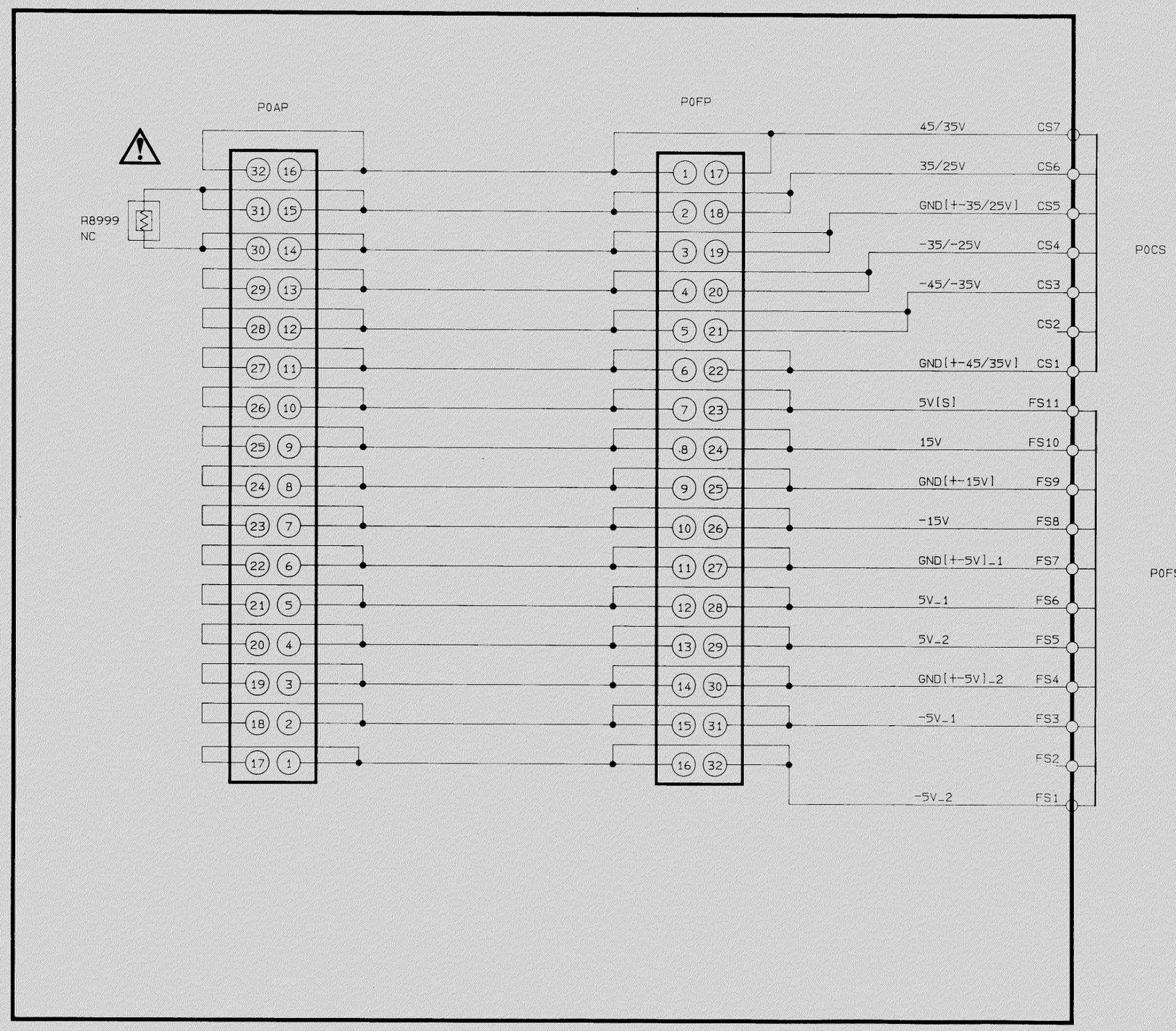

F-MOTHER PWB (PWC-4073C) PARTS SIDE

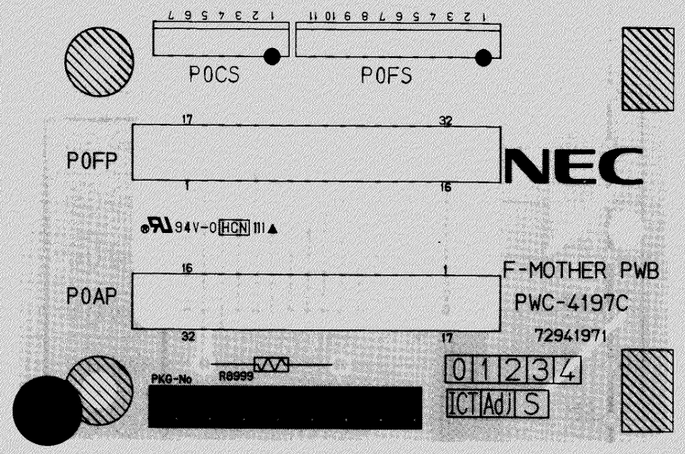

F-MOTHER PWB (PWC-4073C) SOLDER SIDE

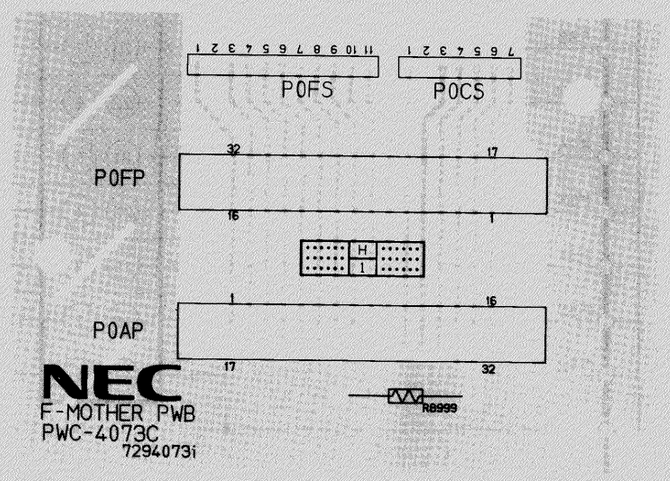

NOTES

1. RESISTOR VALUES ARE IN Ω (OHM) K=1.000Ω M=1.000.000Ω
2. ALL RESISTORS ARE 1/6W, 1/8W EXCEPT WHERE OTHERWISE INDICATED.
3. CAPACITOR VALUES ARE IN μF UNLESS OTHERWISE INDICATED. P=PF
4. ALL CAPACITORS ARE 50VOLTS EXCEPT WHERE OTHERWISE INDICATED.
5. VOLTAGES AND WAVEFORMS MEASURED UNDER FOLLOWING CONDITIONS. INPUT SIGNAL IS STANDARD COLOR BAR CONTRAST CONTROL IS 75% AND CONTROL EXCEPT CONTRAST ARE CENTER.
6. Ⓗ..... HORIZONTAL RATE. Ⓥ..... VERTICAL RATE.

WARNING

REPLACEMENT PARTS WHICH HAVE SPECIAL SAFTY CHARACTERISTICS ARE IDENTIFIED BY ⚠ SHADING ON THE SCHEMATICS.
REPLACE THESE CRITICAL COMPONENTS WITH RECOMMENDED REPLACEMENT PARTS.

C-MOTHER PWB (PWC-4075C)

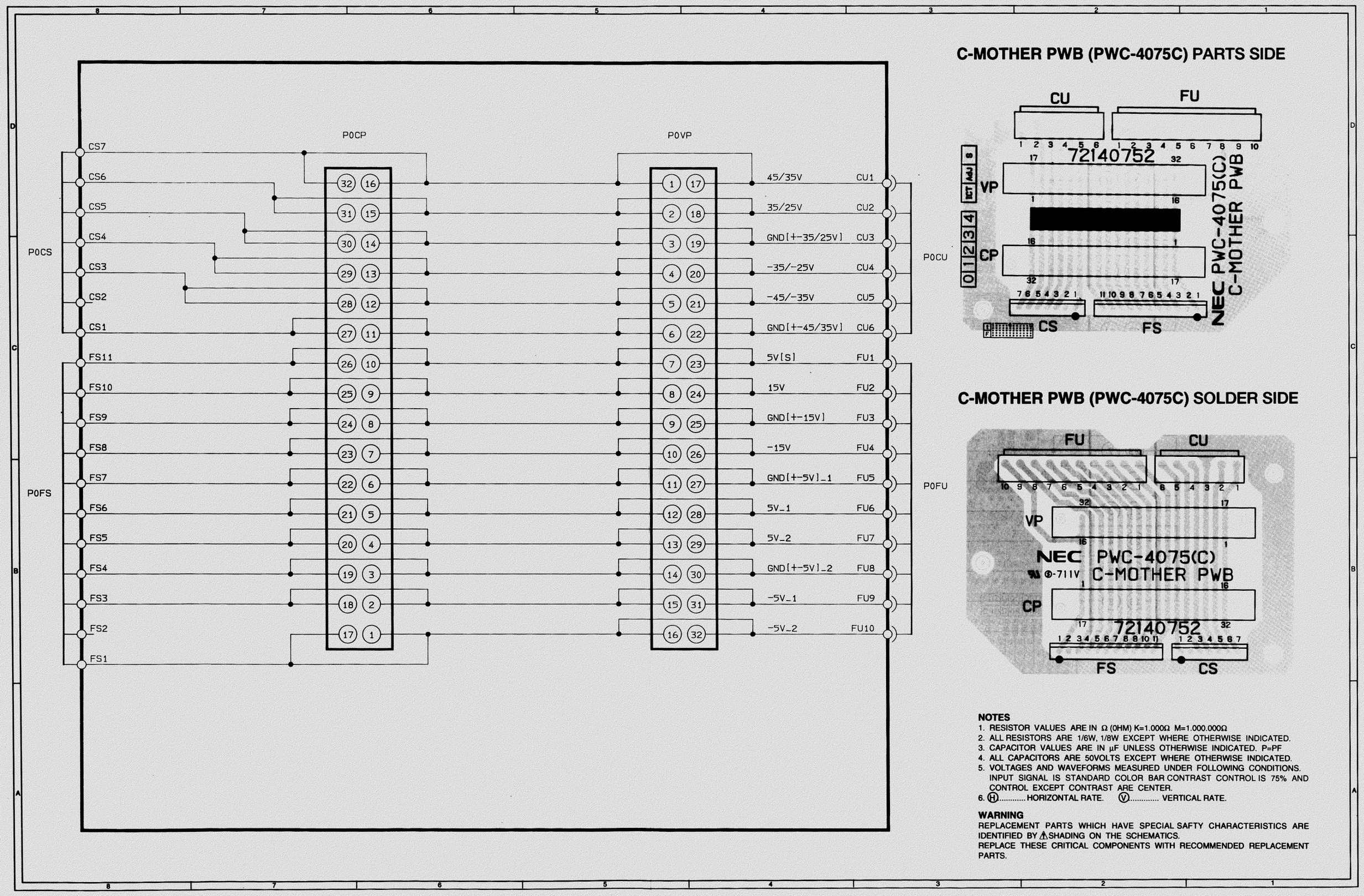

NOTES

1. RESISTOR VALUES ARE IN Ω (OHM) K=1.000Ω M=1.000.000Ω
2. ALL RESISTORS ARE 1/6W, 1/8W EXCEPT WHERE OTHERWISE INDICATED.
3. CAPACITOR VALUES ARE IN μF UNLESS OTHERWISE INDICATED. P=PF
4. ALL CAPACITORS ARE 50VOLTS EXCEPT WHERE OTHERWISE INDICATED.
5. VOLTAGES AND WAVEFORMS MEASURED UNDER FOLLOWING CONDITIONS. INPUT SIGNAL IS STANDARD COLOR BAR CONTRAST CONTROL IS 75% AND CONTROL EXCEPT CONTRAST ARE CENTER.
6. Ⓗ..... HORIZONTAL RATE. Ⓥ..... VERTICAL RATE.

WARNING

REPLACEMENT PARTS WHICH HAVE SPECIAL SAFTY CHARACTERISTICS ARE IDENTIFIED BY ⚠SHADING ON THE SCHEMATICS.
REPLACE THESE CRITICAL COMPONENTS WITH RECOMMENDED REPLACEMENT PARTS.