H-DEF PWB PWC-4069) (2/2)

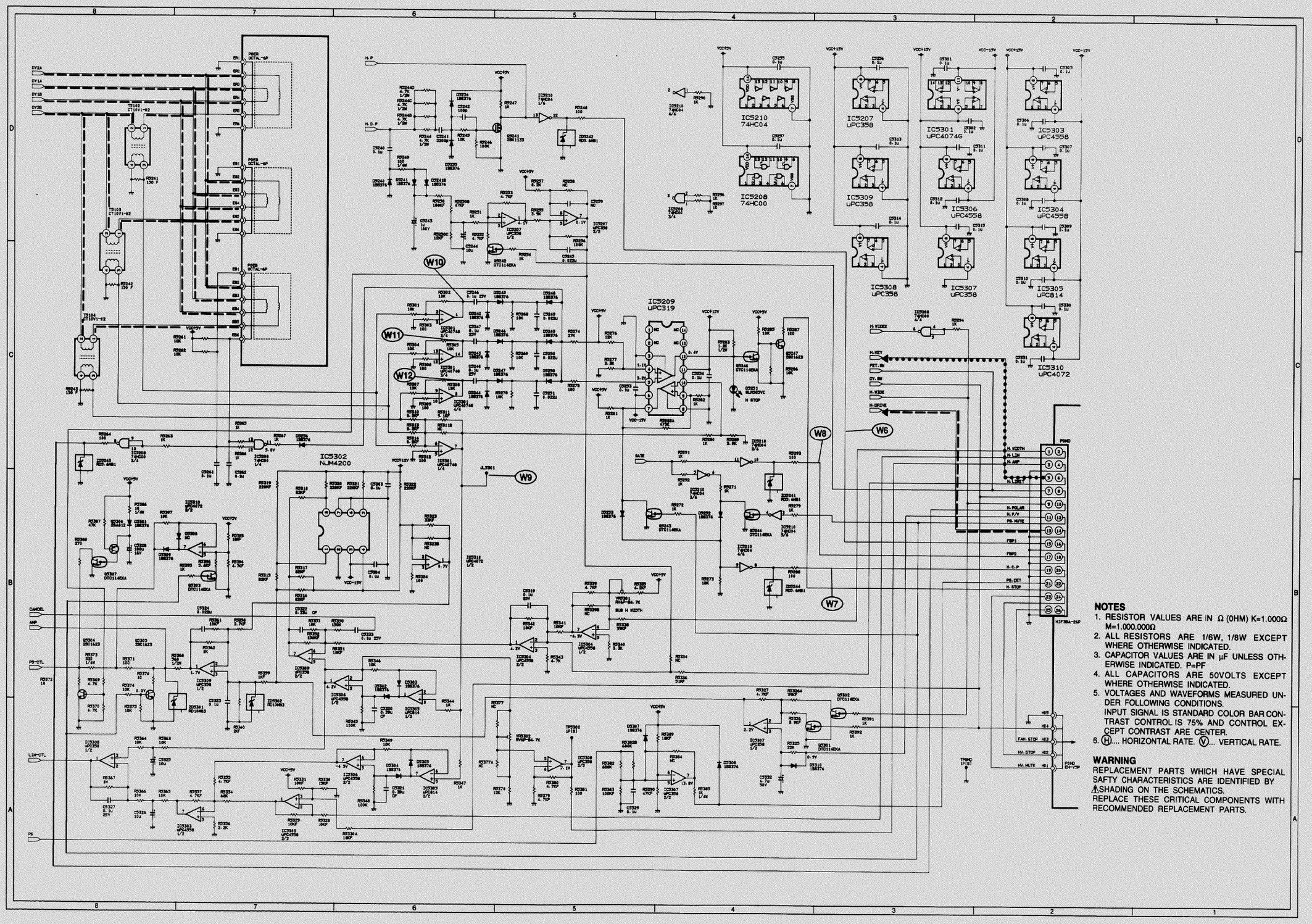

NOTES

1. RESISTOR VALUES ARE IN Ω (OHM) K=1.000Ω M=1.000.000Ω
2. ALL RESISTORS ARE 1/6W, 1/8W EXCEPT WHERE OTHERWISE INDICATED.
3. CAPACITOR VALUES ARE IN μF UNLESS OTHERWISE INDICATED. P=PF
4. ALL CAPACITORS ARE 50VOLTS EXCEPT WHERE OTHERWISE INDICATED.
5. VOLTAGES AND WAVEFORMS MEASURED UNDER FOLLOWING CONDITIONS.
   INPUT SIGNAL IS STANDARD COLOR BAR CONTRAST CONTROL IS 75% AND CONTROL EXCEPT CONTRAST ARE CENTER.
6. Ⓗ... HORIZONTAL RATE. Ⓥ... VERTICAL RATE.

WARNING

REPLACEMENT PARTS WHICH HAVE SPECIAL SAFTY CHARACTERISTICS ARE IDENTIFIED BY ⚠SHADING ON THE SCHEMATICS.
REPLACE THESE CRITICAL COMPONENTS WITH RECOMMENDED REPLACEMENT PARTS.

H-DEF PWB (PWC-4069) WAVE FORM

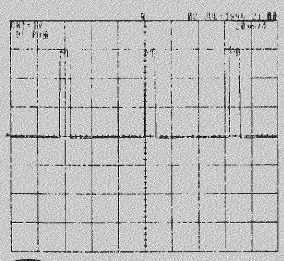
W1

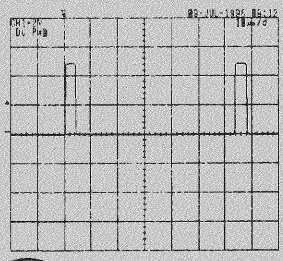
W6

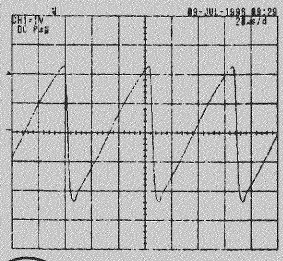
W11

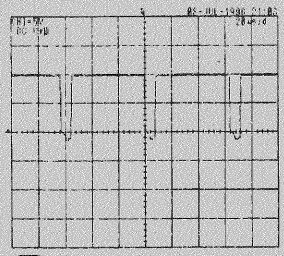
W2

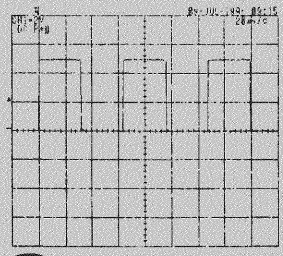
W7

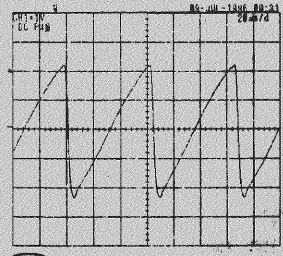
W12

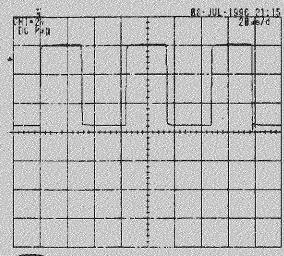
W3

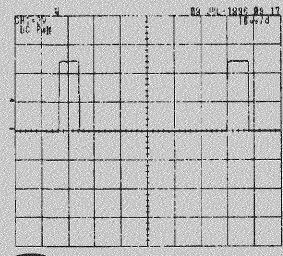
W8

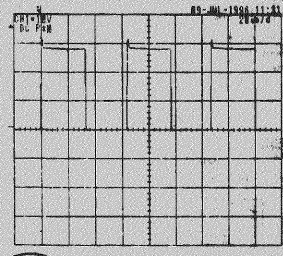
W13

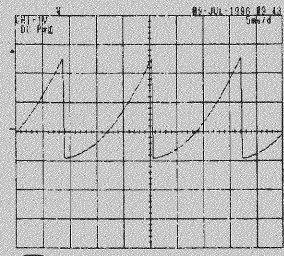
W4

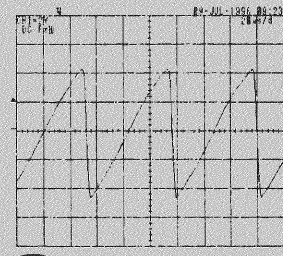
W9

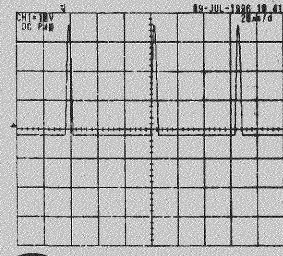
W14

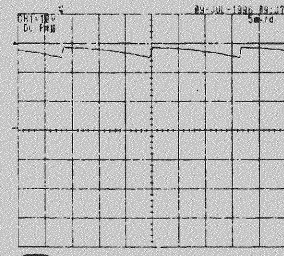
W5

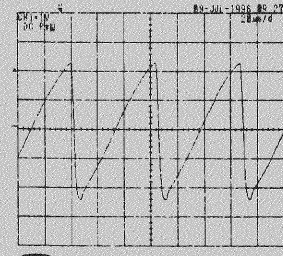
W10

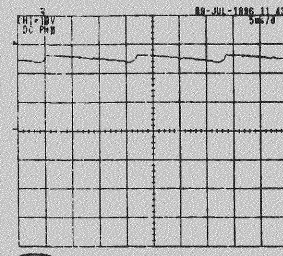
W15

H-DEF PWB (PWC-4069)
PARTS SIDE

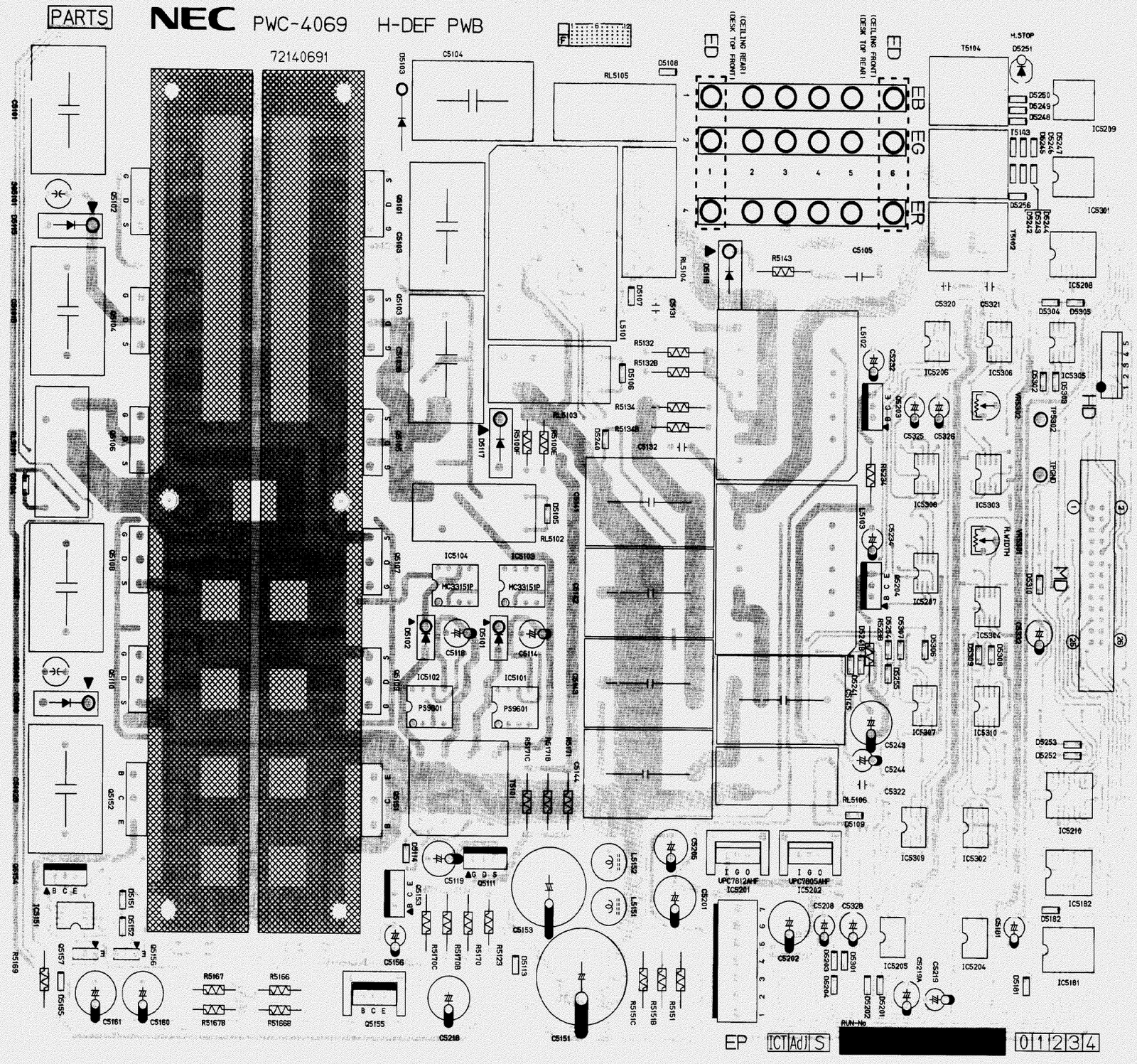

H-DEF PWB (PWC-4069)
SOLDER SIDE

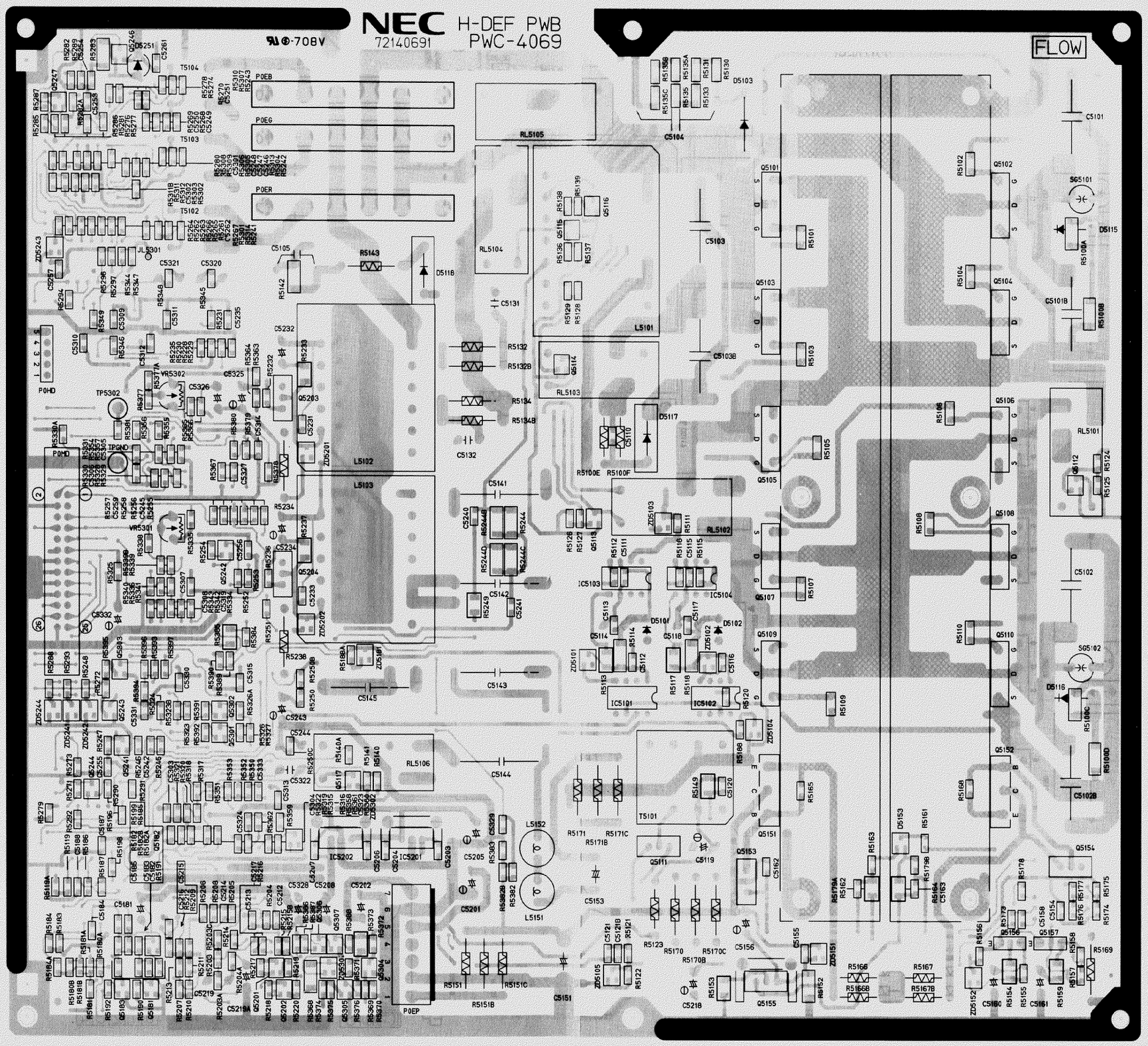

POWER SUPPLY UNIT (PS-A) Models XG-751/XG-1101/XG-1351

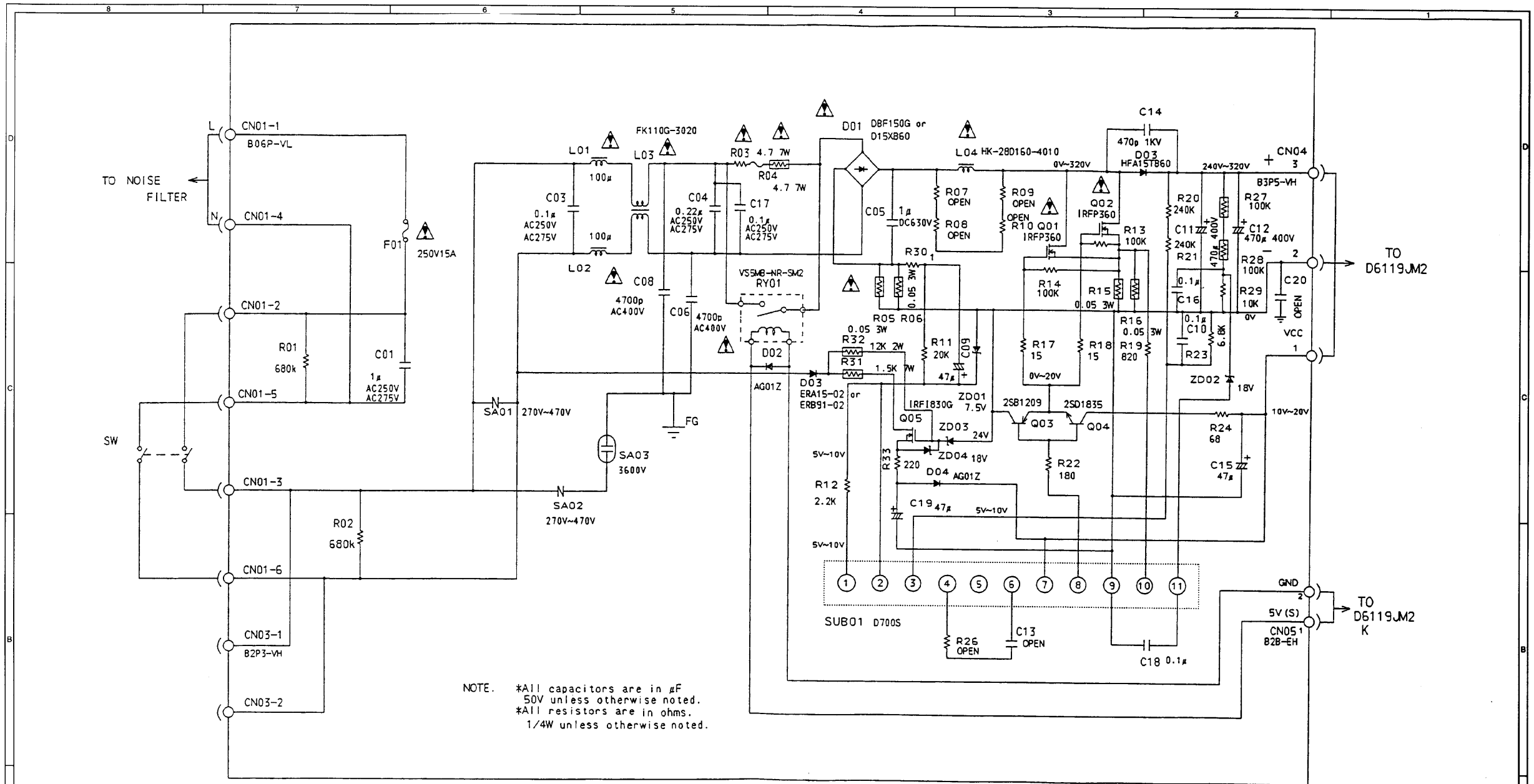

NOTE. *All capacitors are in μF 50V unless otherwise noted.
*All resistors are in ohms. 1/4W unless otherwise noted.

All Symbols Stand For65XX

NOTES

1. RESISTOR VALUES ARE IN Ω (OHM) K=1.000Ω M=1.000.000Ω
2. ALL RESISTORS ARE 1/4W EXCEPT WHERE OTHERWISE INDICATED.
3. CAPACITOR VALUES ARE IN μF UNLESS OTHERWISE INDICATED. P=PF
4. ALL CAPACITORS ARE 50VOLTS EXCEPT WHERE OTHERWISE INDICATED.
5. VOLTAGES AND WAVEFORMS MEASURED UNDER FOLLOWING CONDITIONS. INPUT SIGNAL IS STANDARD COLOR BAR CONTRAST CONTROL IS 75% AND CONTROL EXCEPT CONTRAST ARE CENTER.
6. Ⓗ..... HORIZONTAL RATE. Ⓥ..... VERTICAL RATE.

WARNING

REPLACEMENT PARTS WHICH HAVE SPECIAL SAFTY CHARACTERISTICS ARE IDENTIFIED BY ⚠ SHADING ON THE SCHEMATICS.
REPLACE THESE CRITICAL COMPONENTS WITH RECOMMENDED REPLACEMENT PARTS.

POWER SUPPLY UNIT (PS-A) Models XG-751G/XG-1101G/XG-1351G

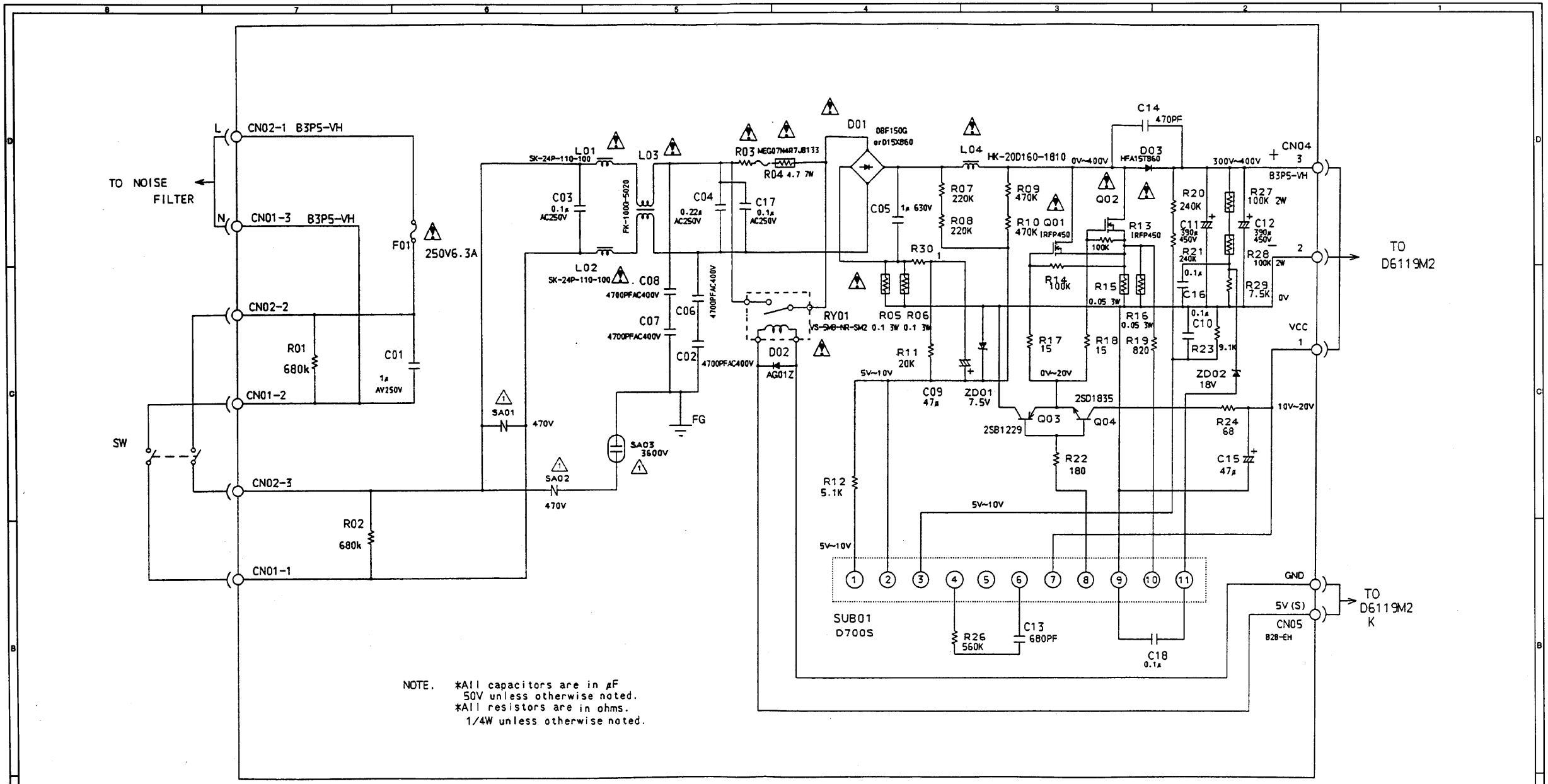

NOTE. *All capacitors are in μF 50V unless otherwise noted.
*All resistors are in ohms. 1/4W unless otherwise noted.

All Symbols Stand For65XX

NOTES

1. RESISTOR VALUES ARE IN Ω (OHM) K=1.000Ω M=1.000.000Ω
2. ALL RESISTORS ARE 1/4W EXCEPT WHERE OTHERWISE INDICATED.
3. CAPACITOR VALUES ARE IN μF UNLESS OTHERWISE INDICATED. P=PF
4. ALL CAPACITORS ARE 50VOLTS EXCEPT WHERE OTHERWISE INDICATED.
5. VOLTAGES AND WAVEFORMS MEASURED UNDER FOLLOWING CONDITIONS. INPUT SIGNAL IS STANDARD COLOR BAR CONTRAST CONTROL IS 75% AND CONTROL EXCEPT CONTRAST ARE CENTER.
6. Ⓗ..... HORIZONTAL RATE. Ⓥ..... VERTICAL RATE.

WARNING

REPLACEMENT PARTS WHICH HAVE SPECIAL SAFTY CHARACTERISTICS ARE IDENTIFIED BY⚠SHADING ON THE SCHEMATICS.
REPLACE THESE CRITICAL COMPONENTS WITH RECOMMENDED REPLACEMENT PARTS.

POWER SUPPLY UNIT (PS-B) (1/4) All Models

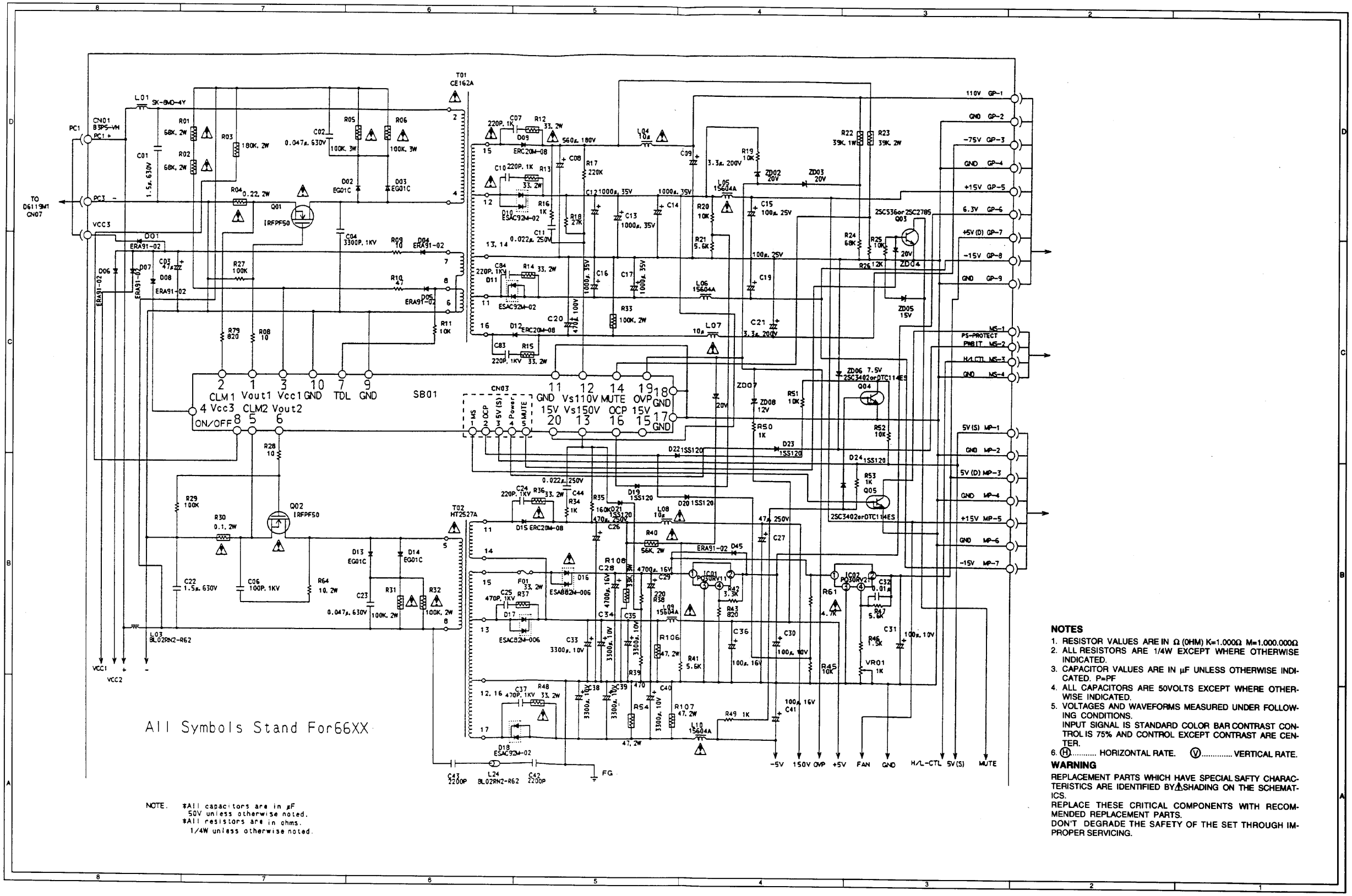

POWER SUPPLY UNIT (PS-B) (2/4) All Models

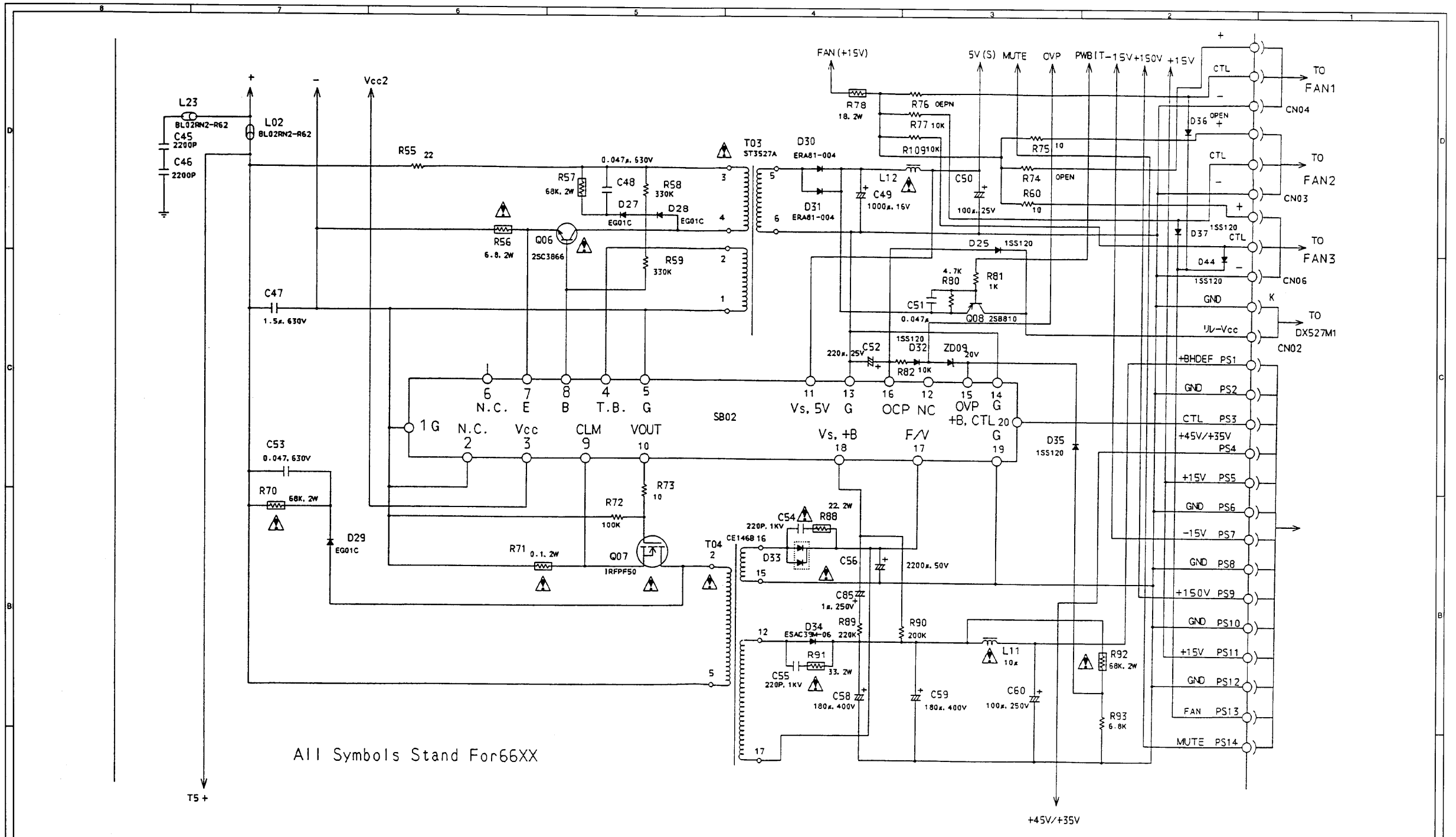

NOTE. *All capacitors are in μF 50V unless otherwise noted.
*All resistors are in ohms. 1/4W unless otherwise noted.

NOTES

1. RESISTOR VALUES ARE IN Ω (OHM) K=1.000Ω M=1.000.000Ω
2. ALL RESISTORS ARE 1/4W, EXCEPT WHERE OTHERWISE INDICATED.
3. CAPACITOR VALUES ARE IN μF UNLESS OTHERWISE INDICATED. P=PF
4. ALL CAPACITORS ARE 50VOLTS EXCEPT WHERE OTHERWISE INDICATED.
5. VOLTAGES AND WAVEFORMS MEASURED UNDER FOLLOWING CONDITIONS.
   INPUT SIGNAL IS STANDARD COLOR BAR CONTRAST CONTROL IS 75% AND CONTROL EXCEPT CONTRAST ARE CENTER.
6. Ⓗ..... HORIZONTAL RATE. Ⓥ..... VERTICAL RATE.

WARNING

REPLACEMENT PARTS WHICH HAVE SPECIAL SAFTY CHARACTERISTICS ARE IDENTIFIED BY ⚠ SHADING ON THE SCHEMATICS.
REPLACE THESE CRITICAL COMPONENTS WITH RECOMMENDED REPLACEMENT PARTS.
DON'T DEGRADE THE SAFETY OF THE SET THROUGH IMPROPER SERVICING.

POWER SUPPLY UNIT (PS-B) (3/4) All Models

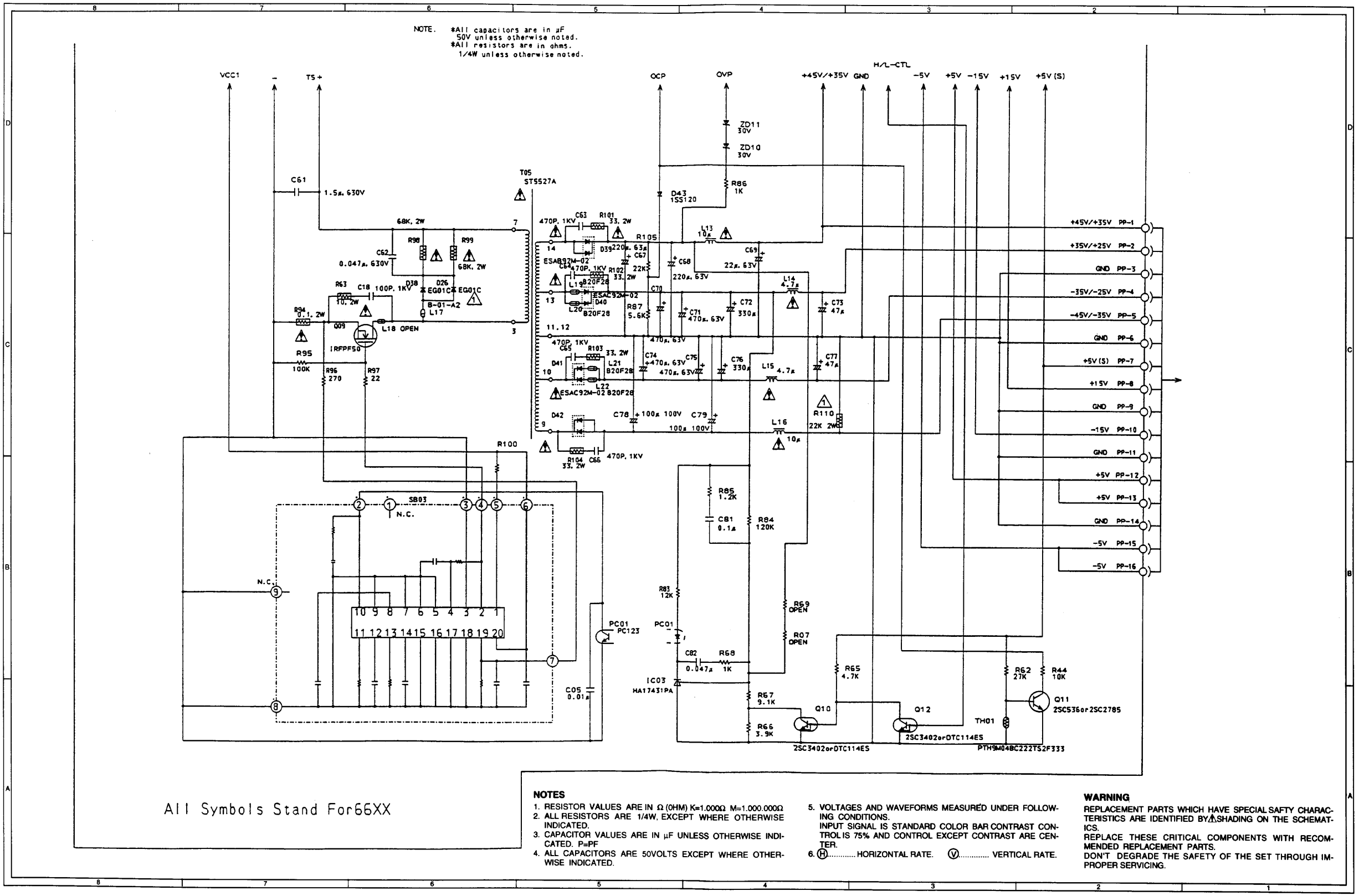

All Symbols Stand For66XX

NOTES

1. RESISTOR VALUES ARE IN Ω (OHM) K=1.000Ω M=1.000.000Ω
2. ALL RESISTORS ARE 1/4W, EXCEPT WHERE OTHERWISE INDICATED.
3. CAPACITOR VALUES ARE IN μF UNLESS OTHERWISE INDICATED. P=PF
4. ALL CAPACITORS ARE 50VOLTS EXCEPT WHERE OTHERWISE INDICATED.
5. VOLTAGES AND WAVEFORMS MEASURED UNDER FOLLOWING CONDITIONS.
   INPUT SIGNAL IS STANDARD COLOR BAR CONTRAST CONTROL IS 75% AND CONTROL EXCEPT CONTRAST ARE CENTER.
6. Ⓗ..... HORIZONTAL RATE. Ⓥ..... VERTICAL RATE.

WARNING

REPLACEMENT PARTS WHICH HAVE SPECIAL SAFTY CHARACTERISTICS ARE IDENTIFIED BY⚠SHADING ON THE SCHEMATICS.
REPLACE THESE CRITICAL COMPONENTS WITH RECOMMENDED REPLACEMENT PARTS.
DON'T DEGRADE THE SAFETY OF THE SET THROUGH IMPROPER SERVICING.

POWER SUPPLY UNIT (PS-B) (4/4) All Models

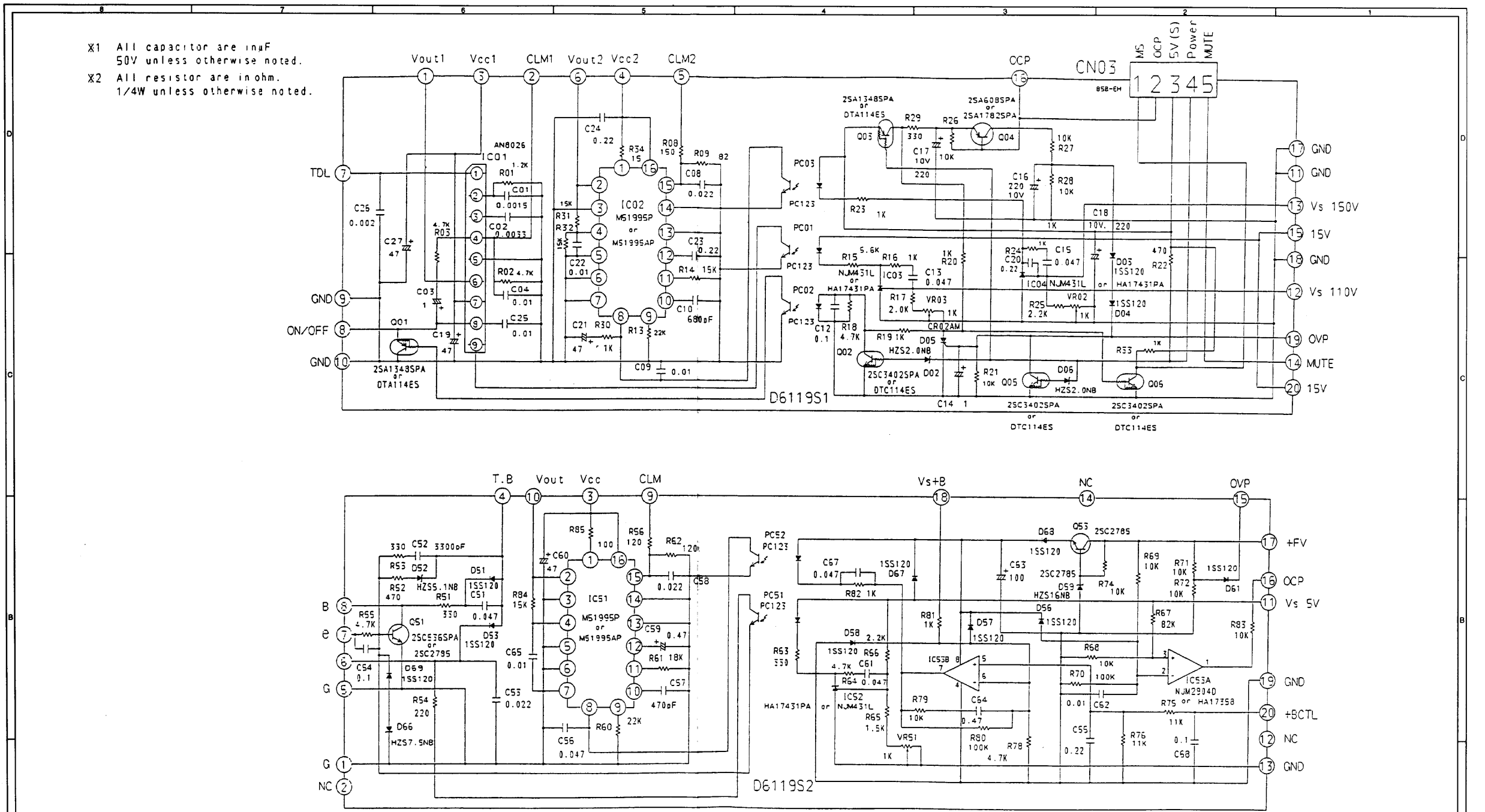

All Symbols Stand For 67XX

NOTES

1. RESISTOR VALUES ARE IN Ω (OHM) K=1.000Ω M=1.000.000Ω
2. ALL RESISTORS ARE 1/4W, EXCEPT WHERE OTHERWISE INDICATED.
3. CAPACITOR VALUES ARE IN μF UNLESS OTHERWISE INDICATED. P=PF
4. ALL CAPACITORS ARE 50VOLTS EXCEPT WHERE OTHERWISE INDICATED.
5. VOLTAGES AND WAVEFORMS MEASURED UNDER FOLLOWING CONDITIONS.
   INPUT SIGNAL IS STANDARD COLOR BAR CONTRAST CONTROL IS 75% AND CONTROL EXCEPT CONTRAST ARE CENTER.
6. Ⓗ..... HORIZONTAL RATE. Ⓥ..... VERTICAL RATE.

WARNING

REPLACEMENT PARTS WHICH HAVE SPECIAL SAFTY CHARACTERISTICS ARE IDENTIFIED BY ⚠ SHADING ON THE SCHEMATICS.
REPLACE THESE CRITICAL COMPONENTS WITH RECOMMENDED REPLACEMENT PARTS.
DON'T DEGRADE THE SAFETY OF THE SET THROUGH IMPROPER SERVICING.

HV PWB (PWC-4077A)

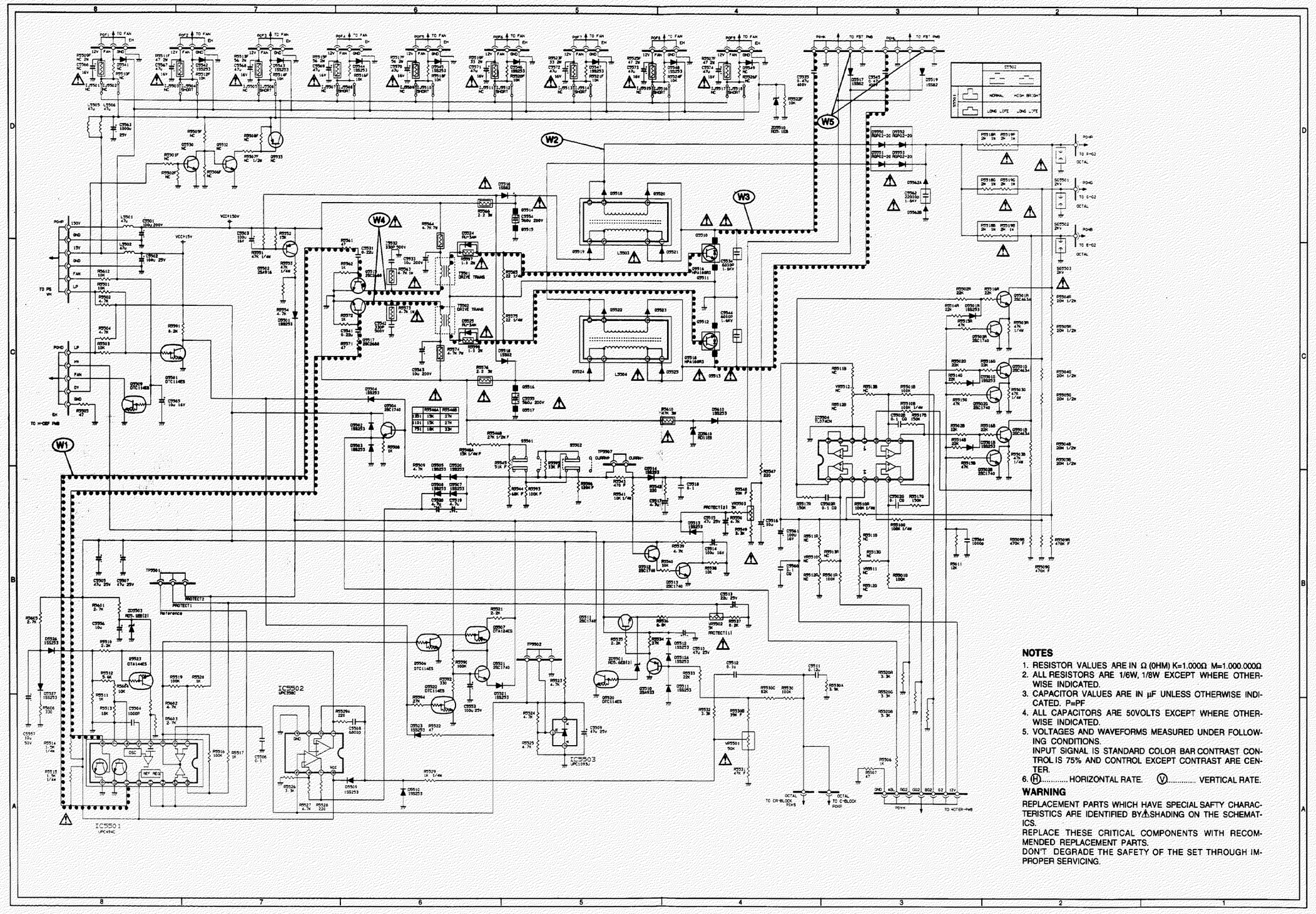

NOTES

1. RESISTOR VALUES ARE IN Ω (OHM) K=1.000Ω M=1.000.000Ω
2. ALL RESISTORS ARE 1/6W, 1/8W EXCEPT WHERE OTHERWISE INDICATED.
3. CAPACITOR VALUES ARE IN μF UNLESS OTHERWISE INDICATED. P=PF
4. ALL CAPACITORS ARE 50VOLTS EXCEPT WHERE OTHERWISE INDICATED.
5. VOLTAGES AND WAVEFORMS MEASURED UNDER FOLLOWING CONDITIONS.
   INPUT SIGNAL IS STANDARD COLOR BAR CONTRAST CONTROL IS 75% AND CONTROL EXCEPT CONTRAST ARE CENTER.
6. (H)..... HORIZONTAL RATE. (V)..... VERTICAL RATE.

WARNING

REPLACEMENT PARTS WHICH HAVE SPECIAL SAFTY CHARACTERISTICS ARE IDENTIFIED BY ⚠ SHADING ON THE SCHEMATICS.
REPLACE THESE CRITICAL COMPONENTS WITH RECOMMENDED REPLACEMENT PARTS.
DON'T DEGRADE THE SAFETY OF THE SET THROUGH IMPROPER SERVICING.

HV PWB (PWC-4077A) WAVE FORM

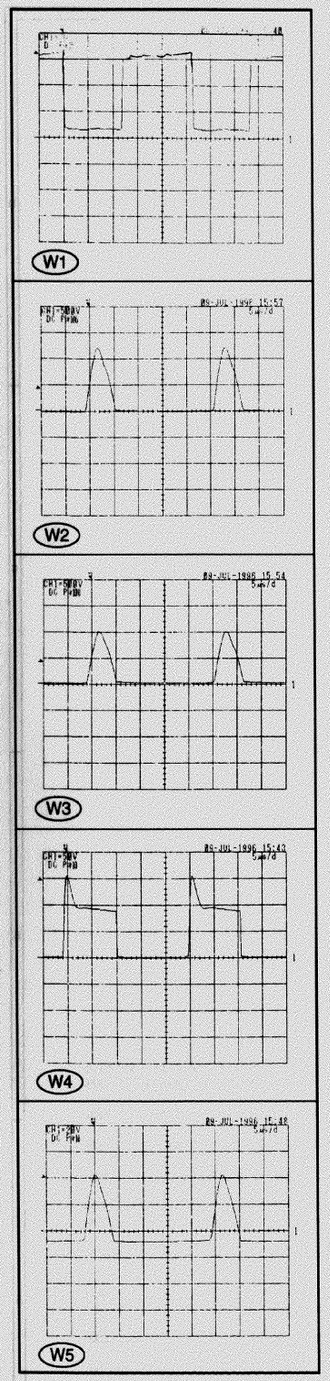

HV PWB (PWC-4077A) PARTS SIDE

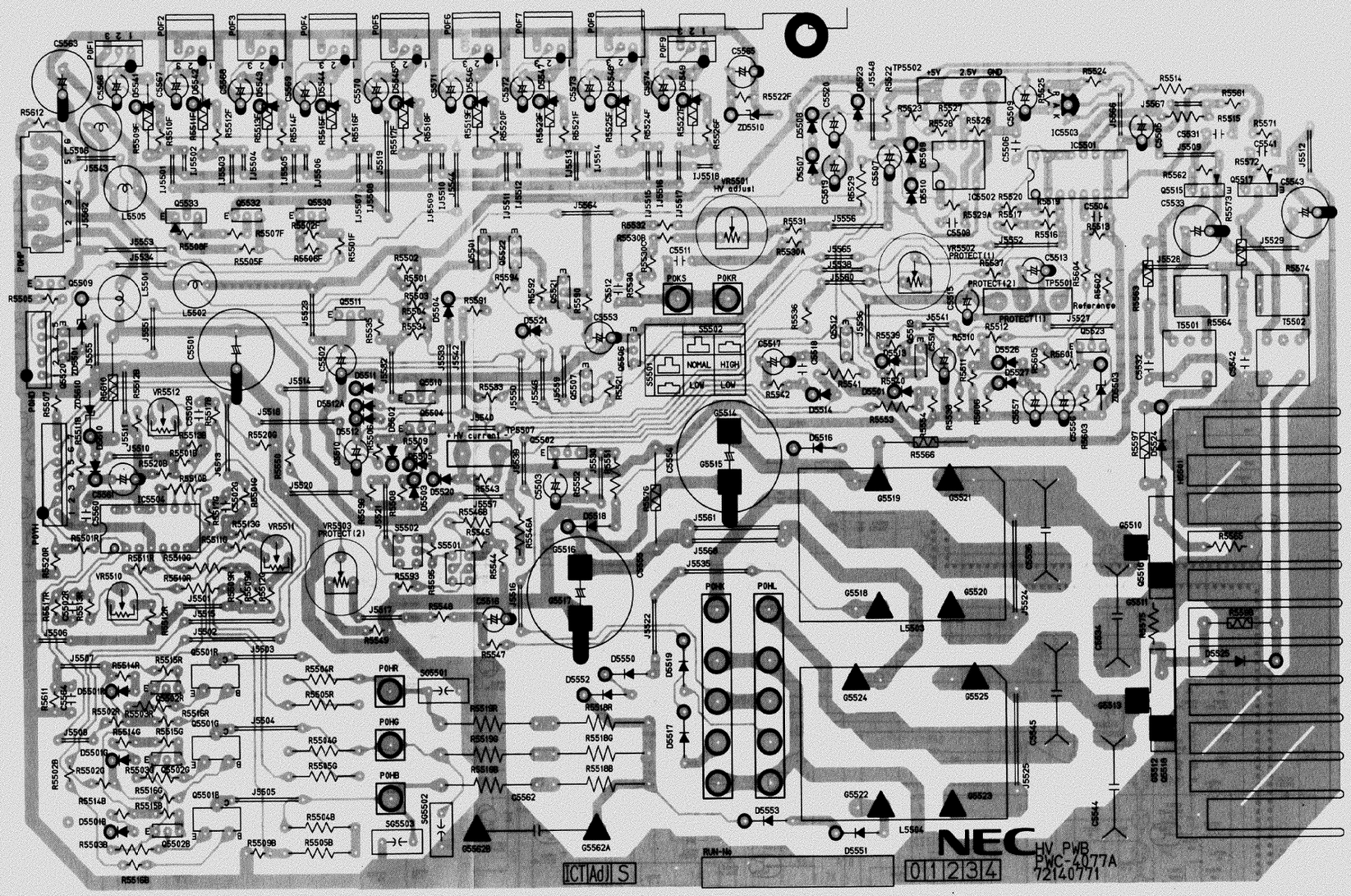

HV PWB (PWC- 4077A)

SOLDER SIDE

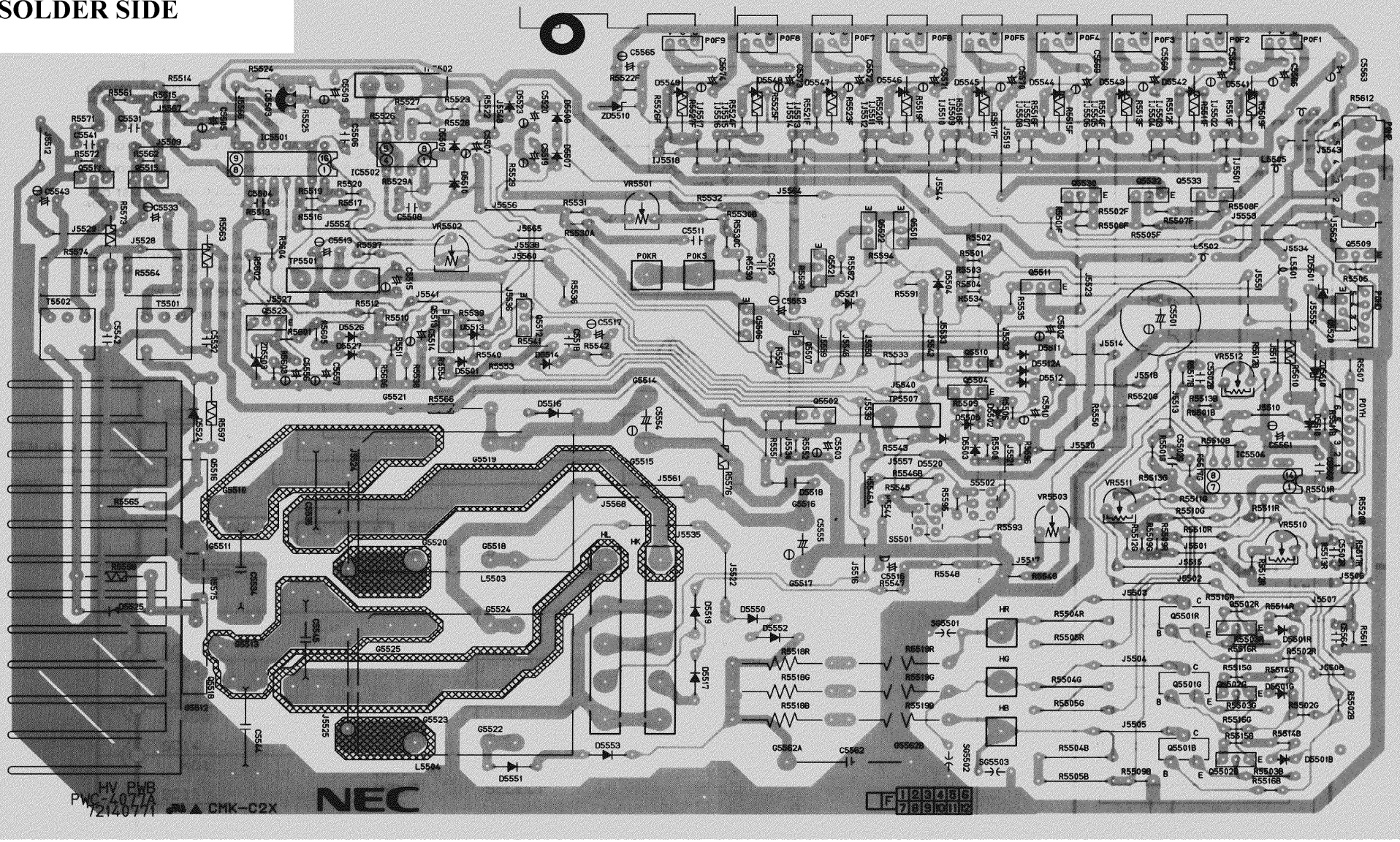

FBT PWB (PWC-4077B)

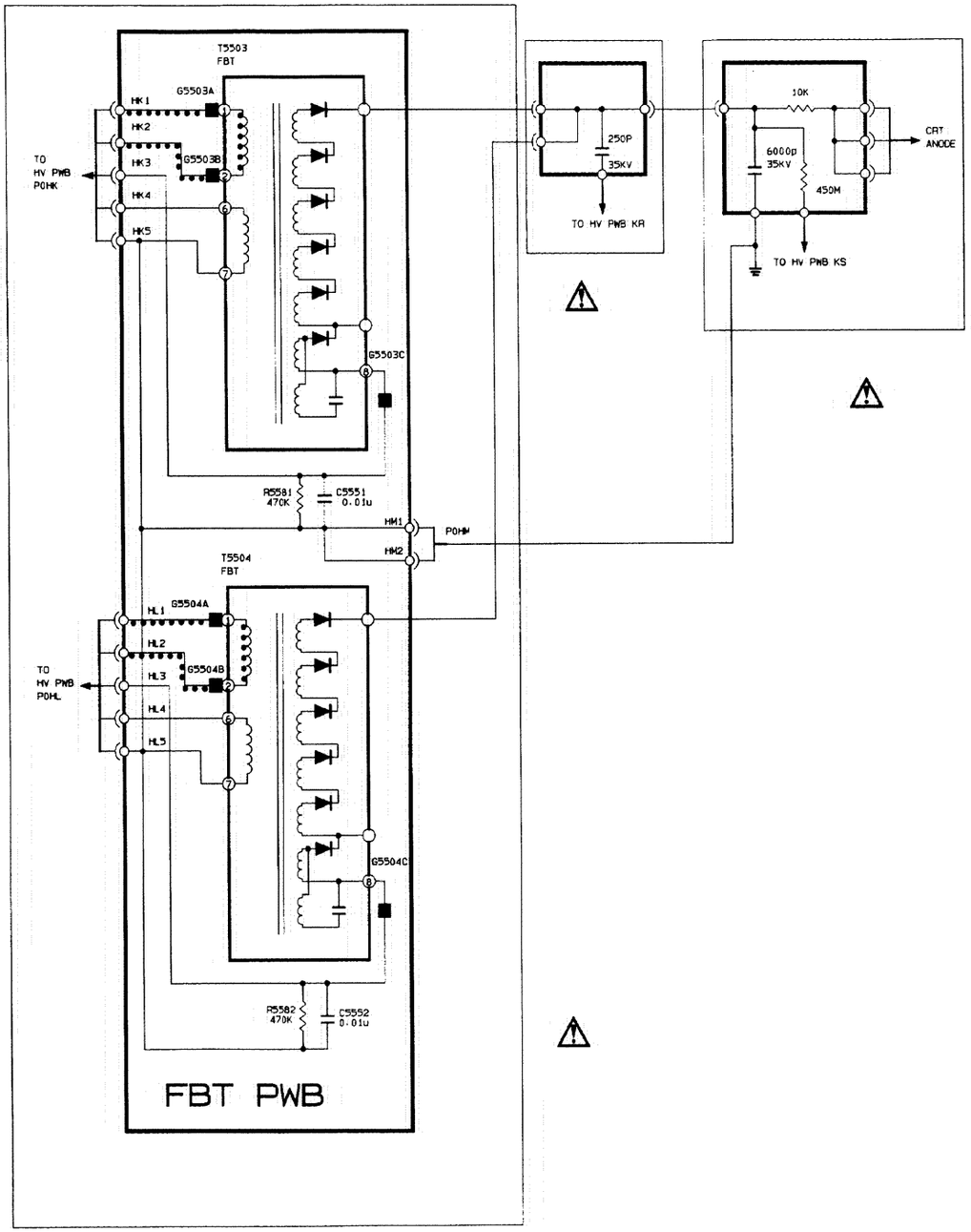

NOTES

1. RESISTOR VALUES ARE IN Ω (OHM) K=1.000Ω M=1.000.000Ω
2. ALL RESISTORS ARE 1/6W, 1/8W EXCEPT WHERE OTHERWISE INDICATED.
3. CAPACITOR VALUES ARE IN uF UNLESS OTHERWISE INDICATED. P=PF
4. ALL CAPACITORS ARE 50VOLTS EXCEPT WHERE OTHERWISE INDICATED.
5. VOLTAGES AND WAVEFORMS MEASURED UNDER FOLLOWING CONDITIONS.
   INPUT SIGNAL IS STANDARD COLOR BAR CONTRAST CONTROL IS 75% AND CONTROL EXCEPT CONTRAST ARE CENTER.
6. Ⓗ..... HORIZONTAL RATE. Ⓥ..... VERTICAL RATE.

WARNING

REPLACEMENT PARTS WHICH HAVE SPECIAL SAFTY CHARACTERISTICS ARE IDENTIFIED BY ⚠ SHADING ON THE SCHEMATICS.
REPLACE THESE CRITICAL COMPONENTS WITH RECOMMENDED REPLACEMENT PARTS.
DON'T DEGRADE THE SAFETY OF THE SET THROUGH IMPROPER SERVICING.

FBT PWB (PWC-4077B)
PARTS SIDE

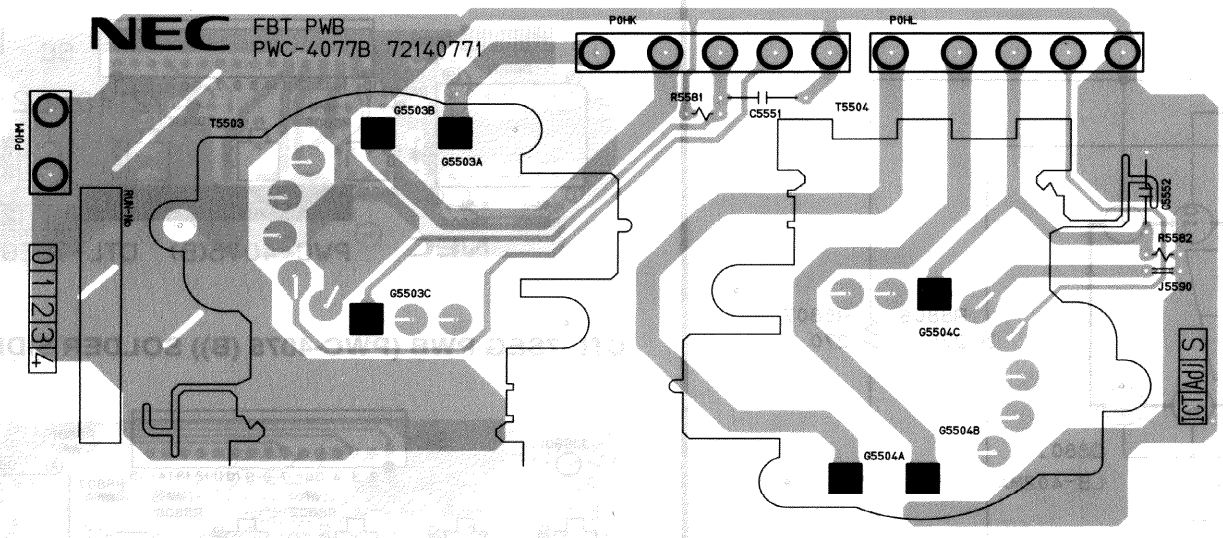

FBT PWB (PWC-4077B)
SOLDER SIDE

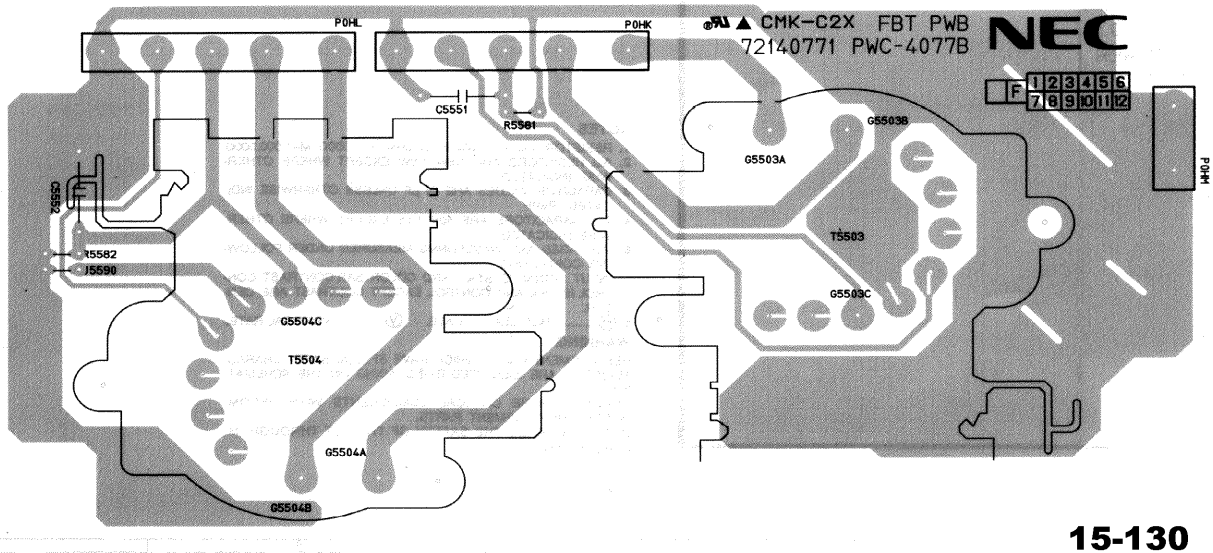

CTL-7SEG (PWC-4075 (B))

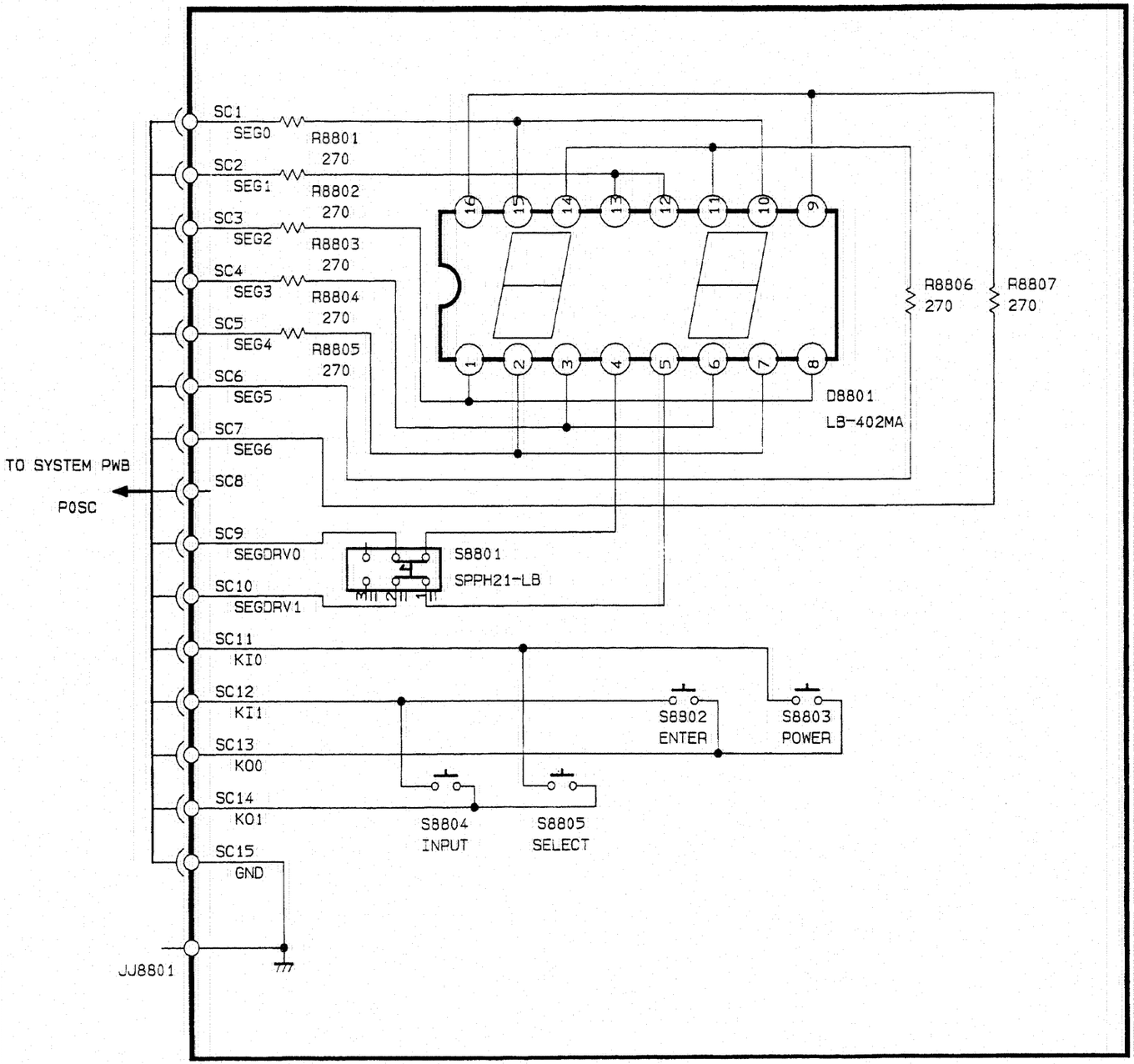

CTL-7SEG PWB (PWC-4075 (B)) PARTS SIDE

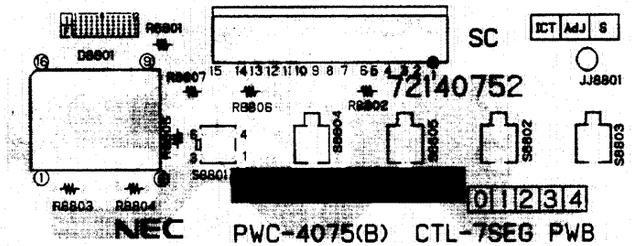

CTL-7SEG PWB (PWC-4075 (B)) SOLDER SIDE

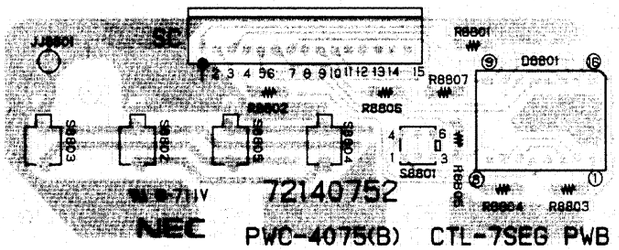

NOTES

1. RESISTOR VALUES ARE IN Ω (OHM) K=1,000Ω M=1,000,000Ω
2. ALL RESISTORS ARE 1/6W, 1/8W EXCEPT WHERE OTHERWISE INDICATED.
3. CAPACITOR VALUES ARE IN μF UNLESS OTHERWISE INDICATED. P=PF
4. ALL CAPACITORS ARE 50VOLTS EXCEPT WHERE OTHERWISE INDICATED.
5. VOLTAGES AND WAVEFORMS MEASURED UNDER FOLLOWING CONDITIONS.
   INPUT SIGNAL IS STANDARD COLOR BAR CONTRAST CONTROL IS 75% AND CONTROL EXCEPT CONTRAST ARE CENTER.
6. Ⓗ.....HORIZONTAL RATE. Ⓥ..... VERTICAL RATE.

WARNING

REPLACEMENT PARTS WHICH HAVE SPECIAL SAFTY CHARACTERISTICS ARE IDENTIFIED BY ⚠ SHADING ON THE SCHEMATICS.
REPLACE THESE CRITICAL COMPONENTS WITH RECOMMENDED REPLACEMENT PARTS.
DON'T DEGRADE THE SAFETY OF THE SET THROUGH IMPROPER SERVICING.

REAR-IR PWB (PWC-4073 (B))

REAR-IR PWB (PWC-4073 (B)) PARTS SIDE

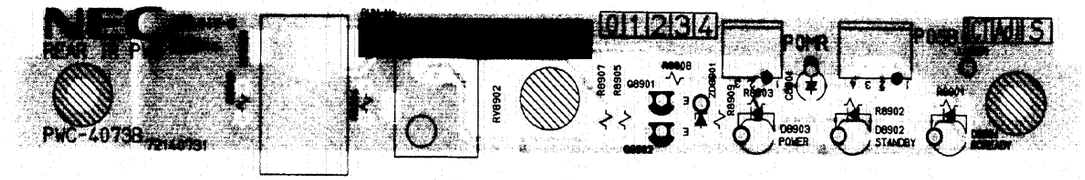

REAR-IR PWB (PWC-4073 (B)) SOLDER SIDE

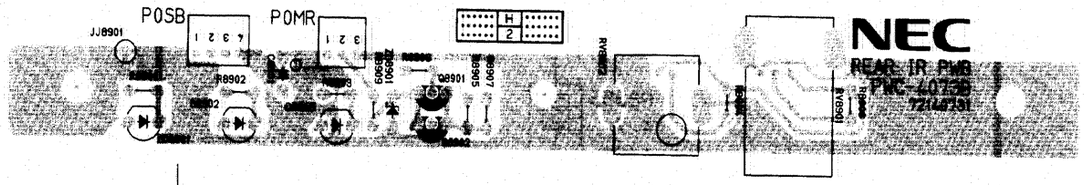

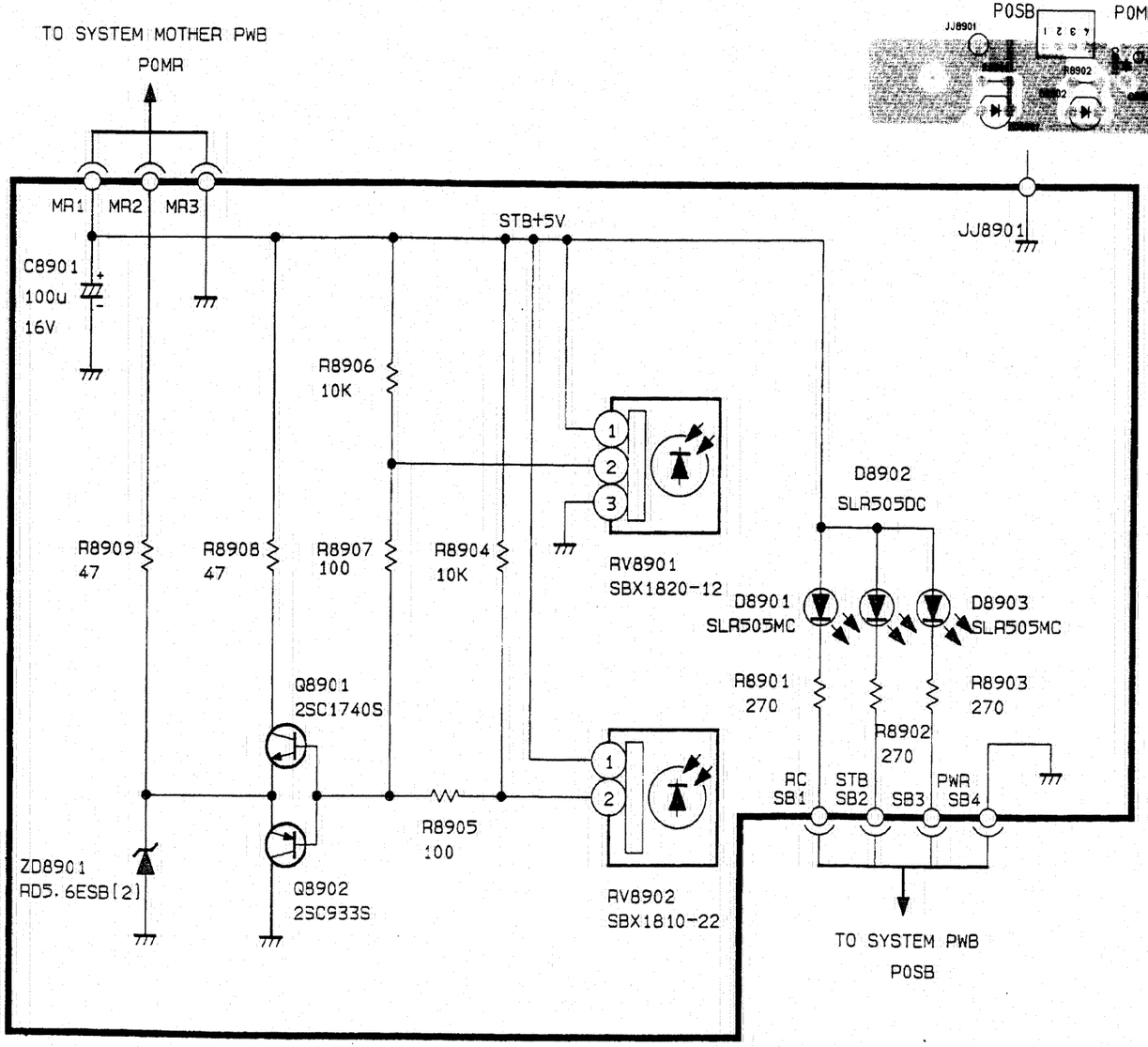

NOTES

1. RESISTOR VALUES ARE IN Ω (OHM) K=1,000Ω M=1,000,000Ω
2. ALL RESISTORS ARE 1/6W, 1/8W EXCEPT WHERE OTHERWISE INDICATED.
3. CAPACITOR VALUES ARE IN μF UNLESS OTHERWISE INDICATED. P=PF
4. ALL CAPACITORS ARE 50VOLTS EXCEPT WHERE OTHERWISE INDICATED.
5. VOLTAGES AND WAVEFORMS MEASURED UNDER FOLLOWING CONDITIONS.
   INPUT SIGNAL IS STANDARD COLOR BAR CONTRAST CONTROL IS 75% AND CONTROL EXCEPT CONTRAST ARE CENTER.
6. Ⓗ.....HORIZONTAL RATE. Ⓥ..... VERTICAL RATE.

WARNING

REPLACEMENT PARTS WHICH HAVE SPECIAL SAFTY CHARACTERISTICS ARE IDENTIFIED BY ⚠ SHADING ON THE SCHEMATICS.
REPLACE THESE CRITICAL COMPONENTS WITH RECOMMENDED REPLACEMENT PARTS.
DON'T DEGRADE THE SAFETY OF THE SET THROUGH IMPROPER SERVICING.

FRONT-IR PWB (PWC-4071 (B))

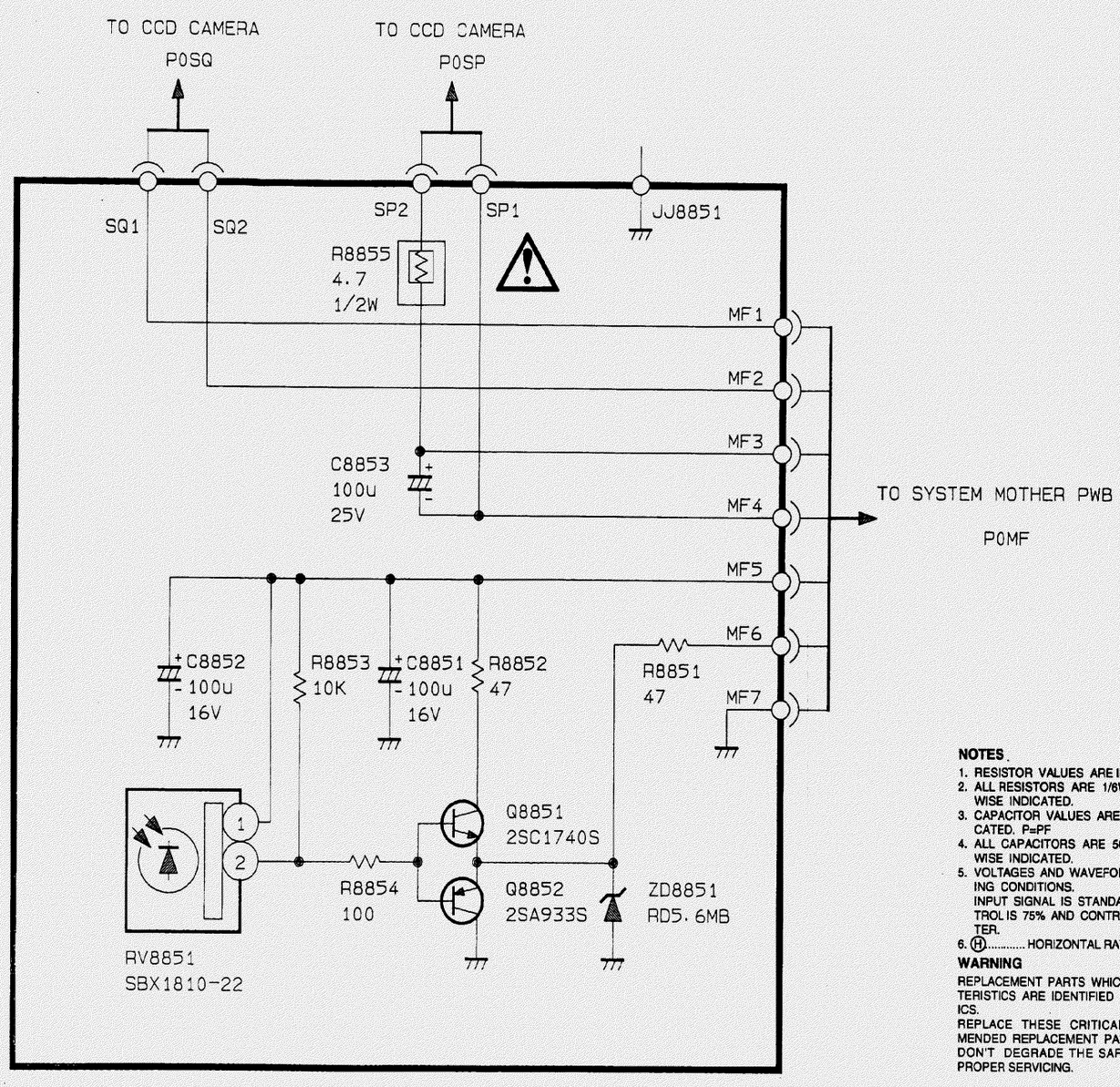

FRONT-IR PWB (PWC-4071 (B)) PARTS SIDE

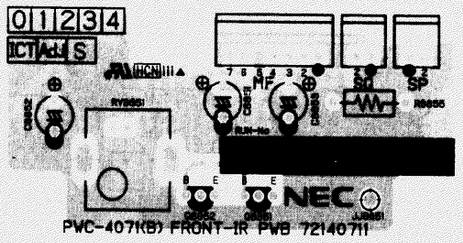

FRONT-IR PWB (PWC-4071 (B)) SOLDER SIDE

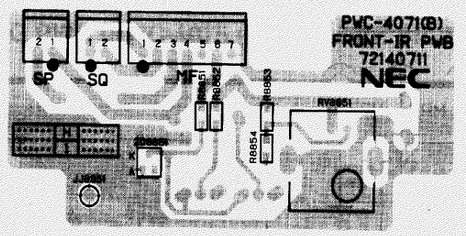

NOTES

1. RESISTOR VALUES ARE IN Ω (OHM) K=1.000Ω M=1.000.000Ω
2. ALL RESISTORS ARE 1/6W, 1/8W EXCEPT WHERE OTHERWISE INDICATED.
3. CAPACITOR VALUES ARE IN μF UNLESS OTHERWISE INDICATED. P=PF
4. ALL CAPACITORS ARE 50VOLTS EXCEPT WHERE OTHERWISE INDICATED.
5. VOLTAGES AND WAVEFORMS MEASURED UNDER FOLLOWING CONDITIONS.
   INPUT SIGNAL IS STANDARD COLOR BAR CONTRAST CONTROL IS 75% AND CONTROL EXCEPT CONTRAST ARE CENTER.
6. Ⓗ..... HORIZONTAL RATE. Ⓥ..... VERTICAL RATE.

WARNING

REPLACEMENT PARTS WHICH HAVE SPECIAL SAFTY CHARACTERISTICS ARE IDENTIFIED BY⚠SHADING ON THE SCHEMATICS.
REPLACE THESE CRITICAL COMPONENTS WITH RECOMMENDED REPLACEMENT PARTS.
DON'T DEGRADE THE SAFETY OF THE SET THROUGH IMPROPER SERVICING.

NEC

C&C for Human Potential

PRINTED IN JAPAN
9709MI1250
01954076 (XG-751)
01954075 (XG-1101)
01954074 (XG-1351)
01954079 (XG-751G)
01954078 (XG-1101G)
01954077 (XG-1351G)