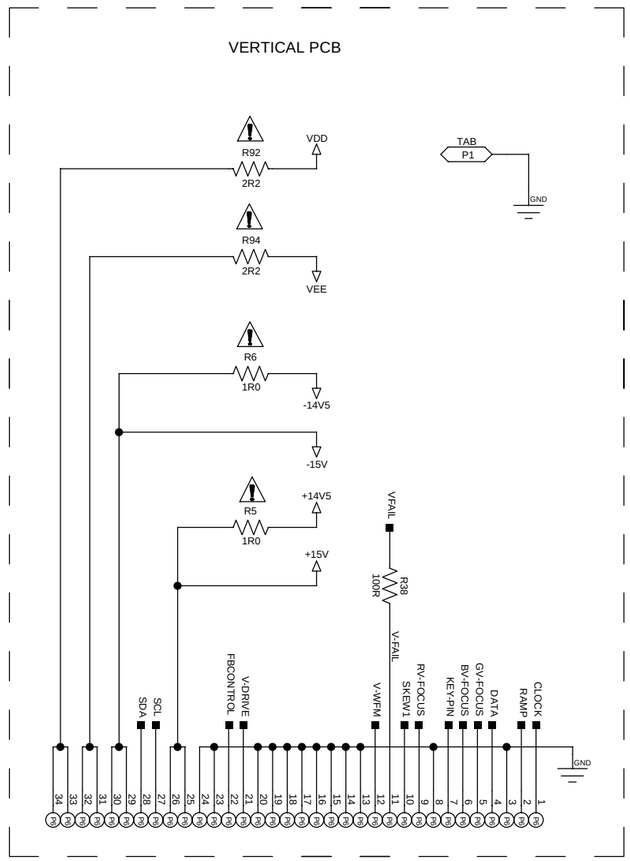

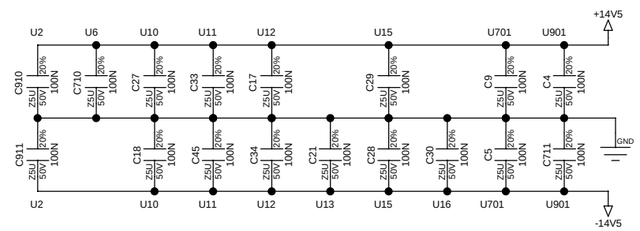

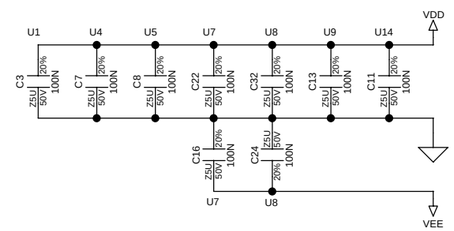

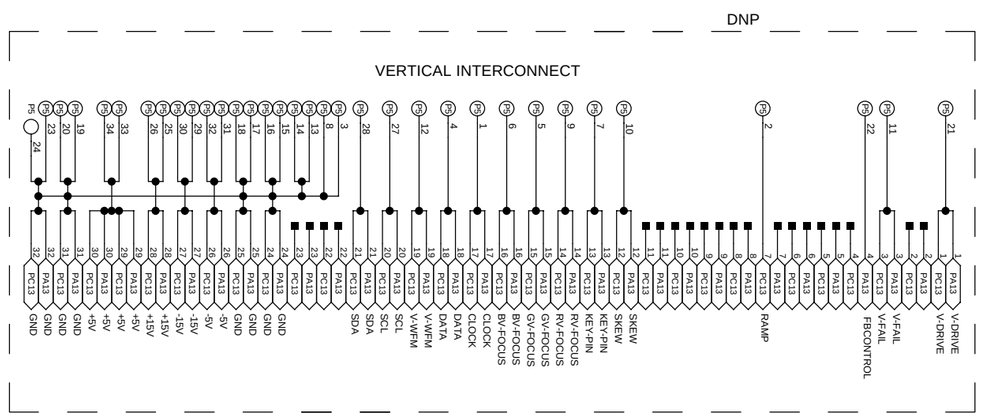

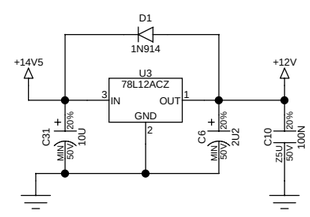

IMPLICIT CHART

REFDES	SYMBOL	VDD	GND
U9	74HC4538	16	8
U14	74HC08	14	7

202901-1

PCB ASSEMBLY NO.: 02-263350-01P	PCB: 50-002330-02P

REVISION HISTORY

ISS	ECO No	DESCRIPTION	DRAWN BY	ISS. DATE	APPROVAL / DATE	
01	-----	ORIGINAL	-----	-----	MP	13DEC96
02	70131	R701,801,901 REVALUED	TP	-----	MP	08MAR97
03	8-110-PE	R67, P5, P13 DNP	PC	-----	MP	12 FEB 98
04	8-0795-E	C20 CHANGED FROM 10% TO 5% 63V	CM	-----	MP	31AUG98
05	8-0926-E	R67 REPOPULATED, ADDED R1700	CM	-----	-----	10-07-98
05	8-0926-E	R1800 R1900 C1700 C1800 C1900	CM	-----	-----	10-07-98
05	8-0926-E	REVALUED R711 R811 AND R911	CM	-----	MP	10-07-98
6	9-1077-PE	REVALUED R704 R804 AND R904, NEW FORM	MP			/12-13-99

NOTES:

1. UNLESS OTHERWISE SPECIFIED:

   1/8W 5% FOR SURFACE RESISTORS

   1/2W 5% FOR THROUGH RESISTORS

   50V 5% FOR ALL CAPACITORS

2. THE FOLLOWING DENOTE CONNECTOR IDENTITIES:

   MALE FEMALE HARNESS

3. "H" AT COMPONENT DENOTES A HEATSINK.
4. "SKT" DENOTES SOCKETED INTEGRATED CIRCUIT.
5. "SM" IDENTIFIES SURFACE MOUNT PARTS.
6. PCB SENSITIVE TO ELECTROSTATIC DISCHARGE.
7. ARROWS ON SIGNAL LINES INDICATE THE DIRECTION OF FLOW.
8. SHIELDED AREAS AS SHOWN.
9. THE FOLLOWING DENOTE GROUND IDENTITIES:

   ANALOG DIGITAL CHASSIS

10. "DNP" IDENTIFIES LOCATIONS THAT ARE NOT POPULATED

HIGHEST	REFERENCE DESIGNATORS	NOT USED

CAUTION

FOR CONTINUED SAFETY, REPLACE ALL COMPONENTS

NOTED BY ⚠ WITH EXACT REPLACEMENT PARTS ONLY!

CONSULT SERVICE MANUAL FOR REPLACEMENT TYPE!

CHRISTIE DIGITAL SYSTEMS INC

© COPYRIGHT

KITCHENER, ONT.
CANADA N2G 4Y7
(519) 744-8005

TITLE: VERTICAL DEFLECTION MODULE

ISS. 6

SCHEMATIC: 00-263350-01P

SHT 1 OF 3

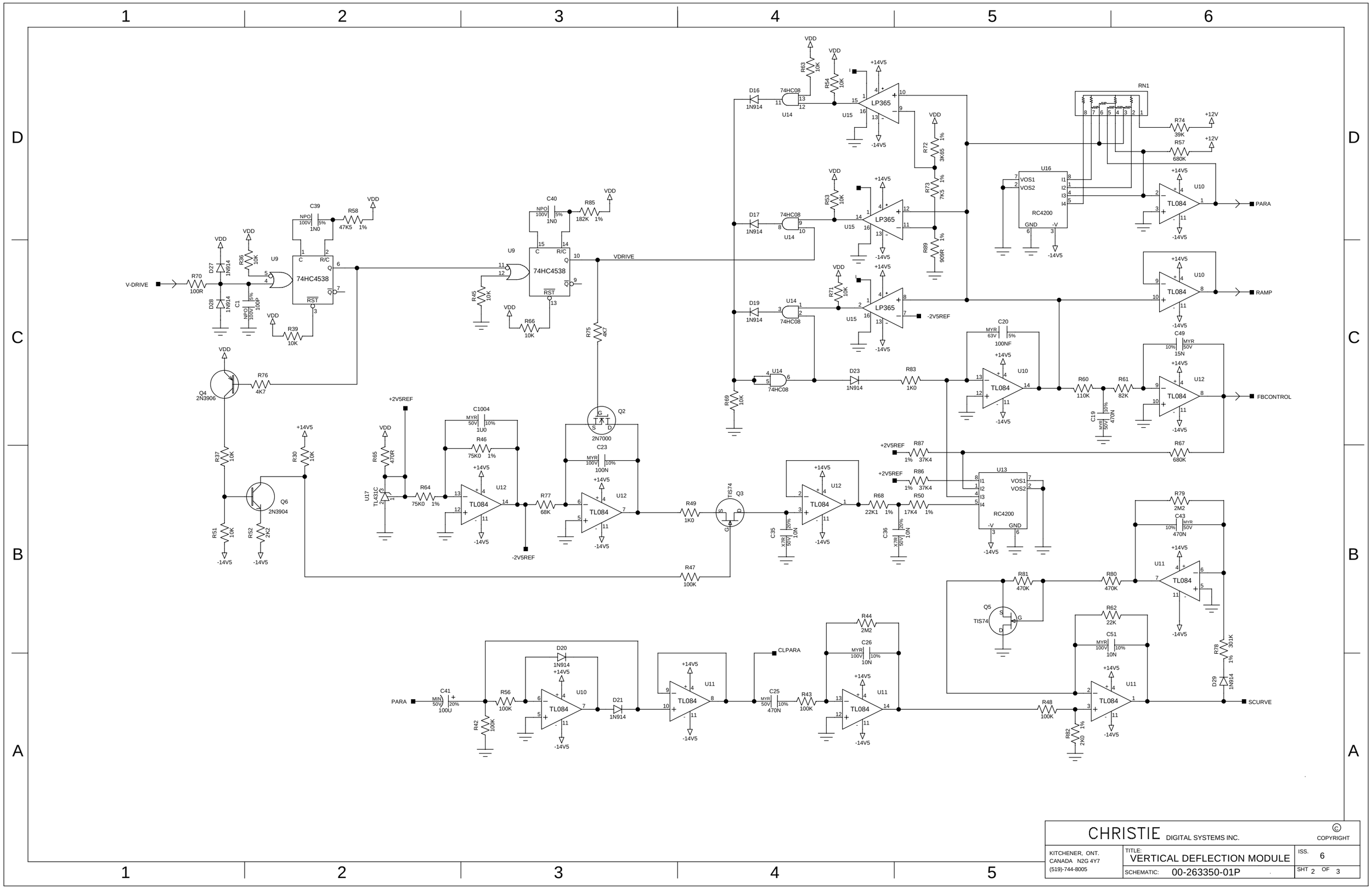

CHRISTIE DIGITAL SYSTEMS INC.

© COPYRIGHT

KITCHENER, ONT.
CANADA N2G 4Y7
(519)-744-8005

TITLE: VERTICAL DEFLECTION MODULE

ISS. 6

SCHEMATIC: 00-263350-01P

SHT 2 OF 3

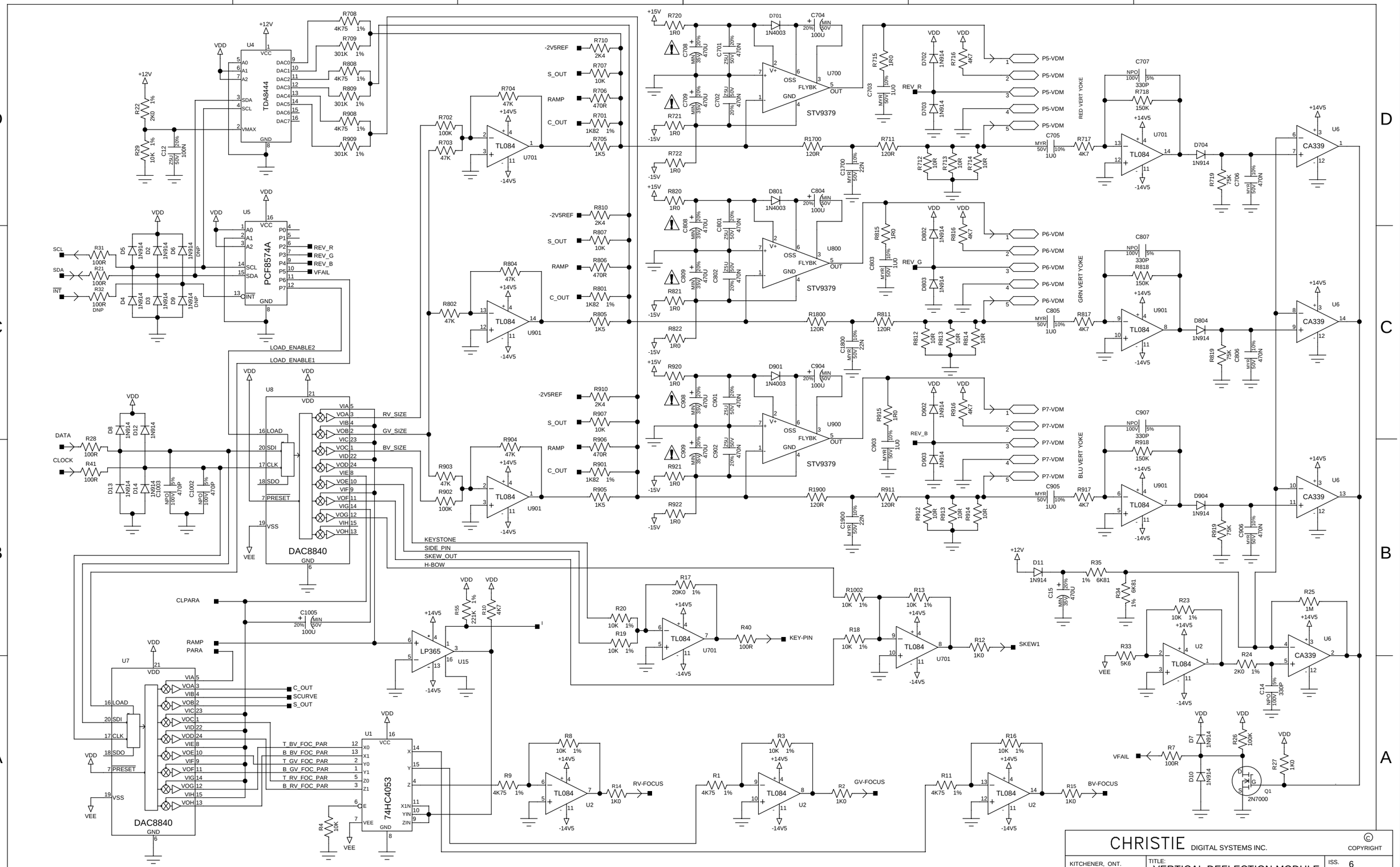
U4
TDA8444
U5
PCF8574A
U8
DAC8840
U7
DAC8840
U1
74HC4053
U15
LP365
U700
U800
U900
U901
U701
U6
U2
STV9379
TL084
CA339
RED VERT YOKE
GRN VERT YOKE
BLU VERT YOKE
P5-VDM
P6-VDM
P7-VDM
REV_R
REV_G
REV_B
VFAIL
LOAD_ENABLE2
LOAD_ENABLE1
RV_SIZE
GV_SIZE
BV_SIZE
KEYSTONE
SIDE_PIN
SKEW_OUT
H-BOW
CLPARA
RAMP
PARA
C_OUT
SCURVE
S_OUT
T_BV_FOC_PAR
B_BV_FOC_PAR
T_GV_FOC_PAR
B_GV_FOC_PAR
T_RV_FOC_PAR
B_RV_FOC_PAR
KEY-PIN
SKEW1
RV-FOCUS
GV-FOCUS
BV-FOCUS
DATA
CLOCK
SCL
SDA
INT
CHRISTIE DIGITAL SYSTEMS INC.
COPYRIGHT
KITCHENER, ONT.
CANADA N2G 4Y7
(519)-744-8005
TITLE:
VERTICAL DEFLECTION MODULE
SCHEMATIC: 00-263350-01P
ISS. 6
SHT 3 OF 3