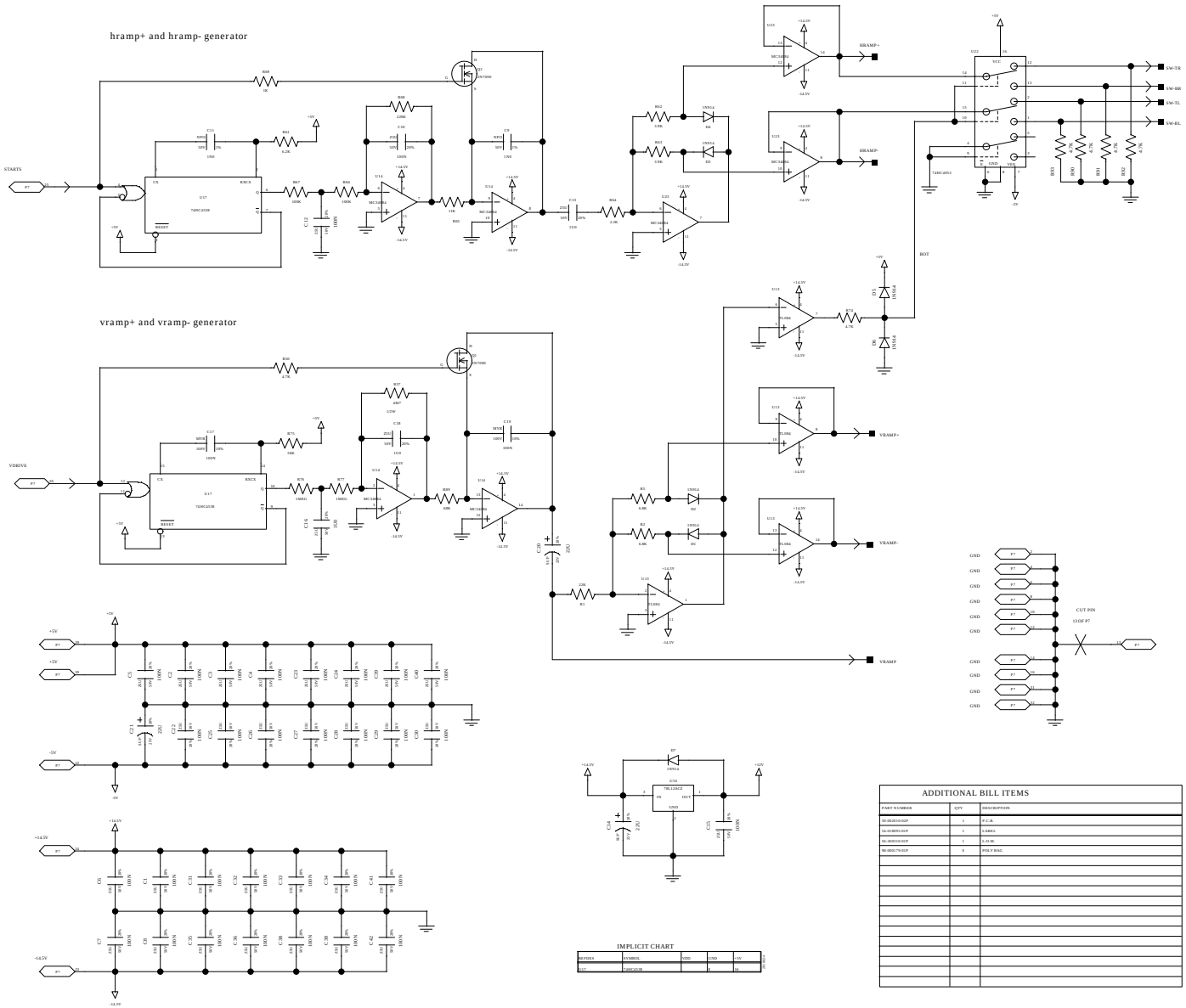

PROJECT:	02-260310-01P	PCB:	50-002010-02P

REVISION HISTORY

ISS	RFC No	DESCRIPTION	DATE	APP
01	------	ORIGINAL (60AS 270310-02P)	21MAY96	
02				
03				
04				
05				
06				
07				
08				
09				
10				

NOTES:

1. UNLESS OTHERWISE SPECIFIED:

   1/8W 5% FOR SURFACE RESISTORS

   1/2W 5% FOR THROUGH RESISTORS

   50V 5% FOR ALL CAPACITORS

2. THE FOLLOWING DENOTE CONNECTOR IDENTITIES:

   MALE — FEMALE — HARNESS

3. "H" AT COMPONENT DENOTES A HEATSINK.

4. "SKT" DENOTES SOCKETED INTEGRATED CIRCUIT.

5. "SM" IDENTIFIES SURFACE MOUNT PARTS.

6. PCB SENSITIVE TO ELECTROSTATIC DISCHARGE.

7. ARROWS ON SIGNAL LINES INDICATE THE DIRECTION OF FLOW.

8. SHIELDED AREAS AS SHOWN.

9. THE FOLLOWING DENOTE GROUND IDENTITIES:

   DIGITAL — ANALOGUE — CHASSIS

10. "DNP" IDENTIFIES THE FOLLOWING PARTS THAT ARE NOT TO BE POPULATED:

HIGHEST	REFERENCE DESIGNATORS	NOT USED

ADDITIONAL BILL ITEMS

PART NUMBER	QTY	DESCRIPTION
00-002010-02P	1	P.C.B.
54-010001-01P	1	LABEL
06-260310-01P	1	S.O.M.
00-002170-02P	8	POLY BAG

IMPLICIT CHART

DEVICES	SYMBOL	GND	GND	+5V	PIN
U17	74HC435B	7	8	16	

CAUTION

FOR CONTINUED SAFETY, REPLACE ALL COMPONENTS

NOTED BY ⚠ WITH EXACT REPLACEMENT PARTS ONLY!

CONSULT SERVICE MANUAL FOR REPLACEMENT TYPE!

ELECTROHOME PROJECTION SYSTEMS

COPYRIGHT

KITCHENER ONT
CANADA N2G 4J6
(519) 744-7111

TITLE: STIGMATOR WAVEFORM BOARD

SCHEMATIC: 00-260310-02P ISS 1 SHT OF 1 2

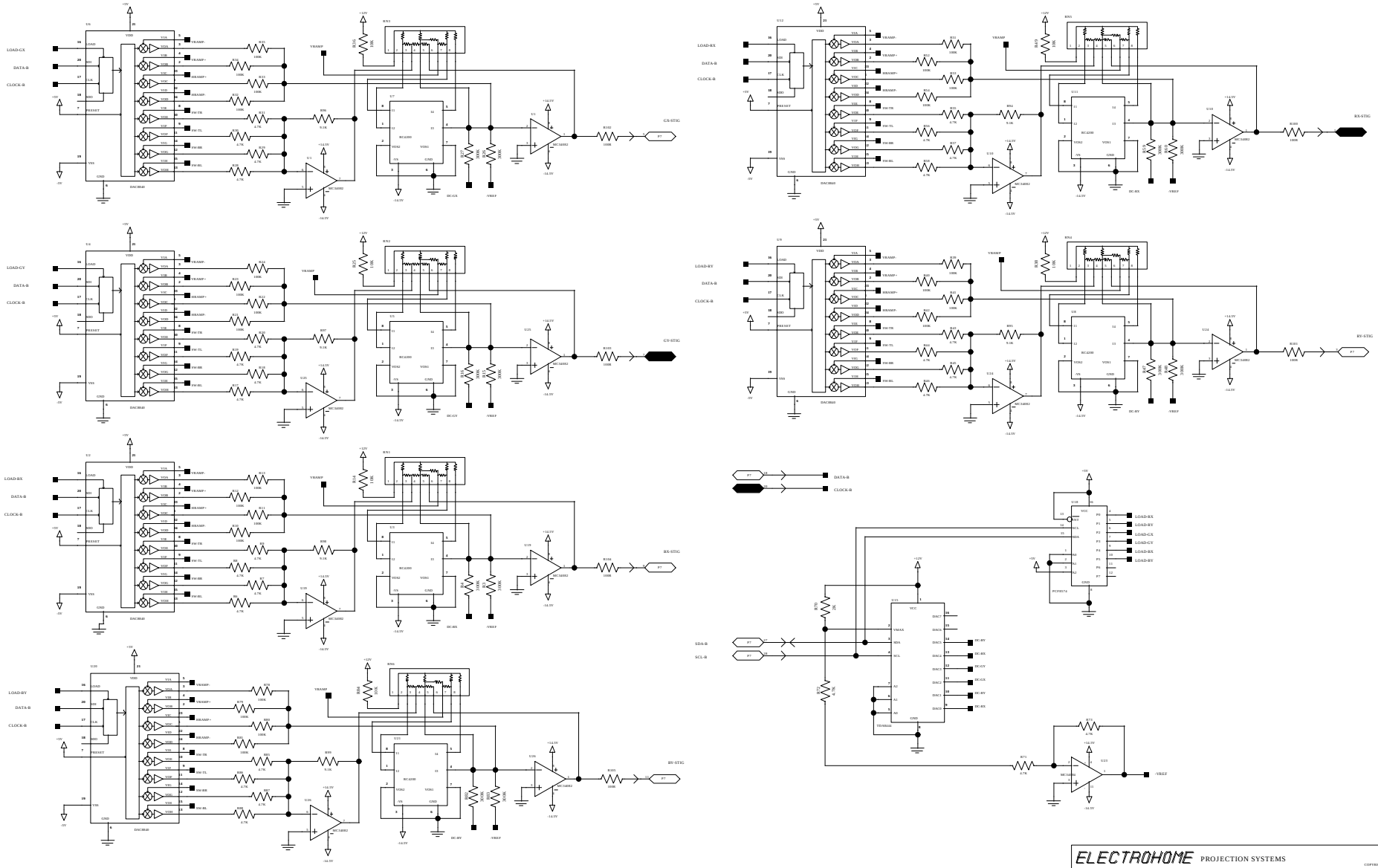
LOAD-GX
DATA-B
CLOCK-B
GX-STIG
LOAD-GY
GY-STIG
LOAD-RX
RX-STIG
LOAD-RY
RY-STIG
DATA-B
CLOCK-B
SDA-B
SCL-B
LOAD-RX
LOAD-RY
LOAD-GX
LOAD-GY
LOAD-BX
LOAD-BY
VREF
ELECTROHOME PROJECTION SYSTEMS
COPYRIGHT
KITCHENER ONT
CANADA N2G 4J6
(519) 744-7111
TITLE:
STIGMATOR WAVEFORM BOARD
D
SCHEMATIC: 00-260310-02P
ISS 1
SHT OF 2 2